D35 PRO SERIES

Maximum Flow Rate: 36.5 gpm (138 l/min)
Maximum Pressure: 1500 psi (103 bar) for Metallic Pump Heads

WANNER™ HYDRA-CELL® PRO
SEAL-LESS PUMP TECHNOLOGIES

QUICK & DISCOUNTED PRICING
CLICK HERE
OR CALL (908) 362-9981

D35 Pro with 316L Stainless Steel pump head.

UK CA CE

Versatile, reliable pumps for a wide range of applications.

- Pumps the full spectrum of low-to-high viscosity fluids.
- Features a seal-less design and horizontal disk check valves that enable the pump to handle abrasives and particulates that might damage or destroy other types of pumps.
- Simple, compact design reduces initial investment and lowers maintenance costs.
- Operational efficiencies reduce energy costs.
- Able to run dry without damage (or additional maintenance) to the pump in case of accident or operator error.
- Tolerates non-ideal operating conditions.
- Minimizes maintenance and downtime because there are no mechanical or dynamic seals, packing, or cups to leak, wear, or replace.

Capacities

Model	Max. Input rpm	Max. Flow Capacities @1200 psi (83 bar) gpm	l/min	Max. Inlet Pressure psi	bar	Max. Discharge Pressure Metallic Heads psi	bar
D35-X	1050	36.5	138	500	34	1200	83
D35-E	1150	34.0	129	500	34	1200	83

Model	Max. Input rpm	Max. Flow Capacities @1500 psi (103 bar) gpm	l/min	Max. Inlet Pressure psi	bar	Max. Discharge Pressure Metallic Heads psi	bar
D35-X	700	23.1	87.5	250	17	1500	103

Performance and specification ratings apply to D35 configurations unless specifically noted otherwise.

**** Consult factory if operating above 1200 psi (83 bar).***

Maximum Flow at Designated Pressure

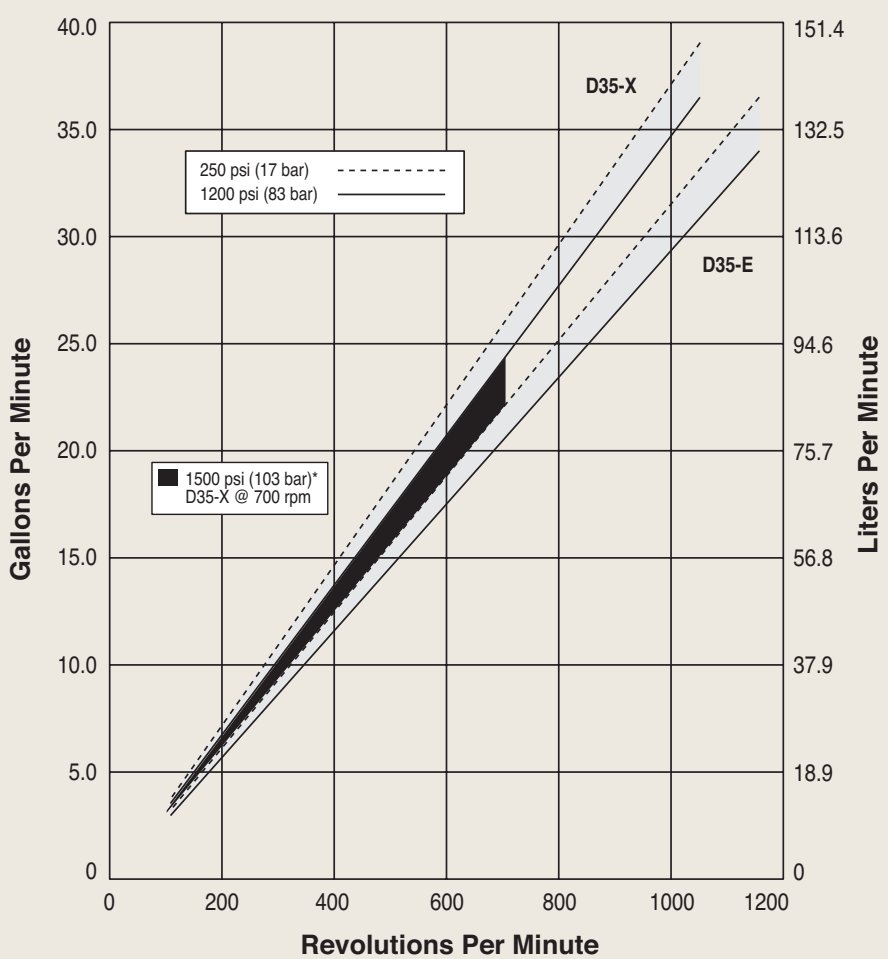

D35 Pro Series | Specifications

Flow Capacities @1200 psi (83 bar)

Model	rpm	gpm	l/min
D35-X	1050	36.5	138
D35-E	1150	34.0	129

Delivery @1200 psi (83 bar)

Model	gal/rev	liters/rev
D35-X	0.0347	0.1314
D35-E	0.0296	0.1120

Delivery @1500 psi (103 bar)

Model	gal/rev	liters/rev
D35-X	0.0330	0.1250

Maximum Discharge Pressure

Metallic Heads: 1200 psi (83 bar) @ 1150 rpm max.
1500 psi (103 bar) @ 700 rpm max. – Consult factory if operating above 1200 psi (83 bar).

Maximum Inlet Pressure

250 psi (17 bar) with 1500 psi (103 bar) maximum discharge pressure
500 psi (34 bar) with 1200 psi (83 bar) maximum discharge pressure

Maximum Operating Temperature

Metallic Heads: 250˚F (121˚C) - Consult factory for correct component selection for temperatures from 160˚F (71˚C) to 250˚F (121˚C).

Maximum Solids Size 800 microns

Inlet Port

2-1/2 inch NPT
150lb or 600lb ANSI RF flange
3 inch SAE flange

Discharge Port

1-1/4 inch NPT
600lb or 1500lb ANSI RF flange
1-1/4 inch SAE flange

Calculating Required Power

$$\frac{100 \times \text{rpm}}{63{,}000} + \frac{\text{gpm} \times \text{psi}}{1{,}460} = \text{electric motor hp}$$

$$\frac{100 \times \text{rpm}}{84{,}428} + \frac{\text{l/min} \times \text{bar}}{511} = \text{electric motor kW}$$

Attention!
When using a variable frequency drive (VFD) controller, calculate the hp or kW at minimum and maximum pump speed to ensure the correct hp or kW motor is selected. Note that motor manufacturers typically de-rate the service factor to 1.0 when operating with a VFD.

Calculating Pulley Size

$$\frac{\text{motor pulley OD}}{\text{pump rpm}} = \frac{\text{pump pulley OD}}{\text{motor rpm}}$$

Shaft Diameter	2 inch (50.8 mm)
Shaft Rotation	Reverse (bi-directional)
Bearings	Tapered roller bearings
Oil Capacity	7.75 US quarts (7.3 liters)
Weight	
Metallic Heads:	257 lbs. (116.6 kg)

Net Positive Suction Head (NPSHr)

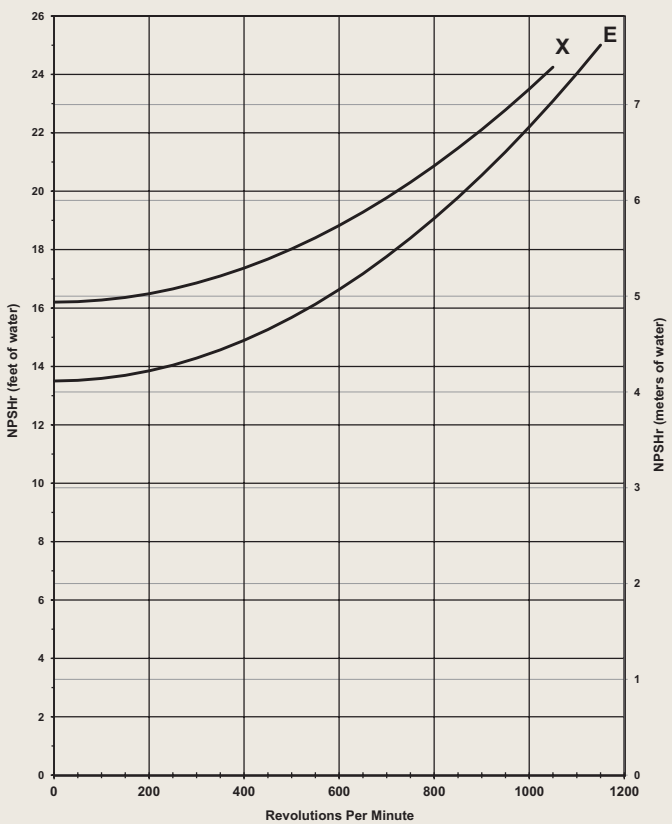

Note: Positive inlet pressure required with PTFE diaphragms.

Suction Lift

Each Hydra-Cell pump has different lift capability depending on model size, cam angle, speed, and fluid characteristics. To ensure that your specific lift characteristics are met, refer to the inlet calculations regarding friction, and acceleration head losses in your Hydra-Cell Product Manual. Compare those calculations to the NPSHr curves above.

Due to the Wanner Engineering Continuous Improvement Program, specifications and other data are subject to change.

D35 Pro Series | Representative Drawings

D35 Models with NPT Inlet/Outlet Ports Inches (mm)

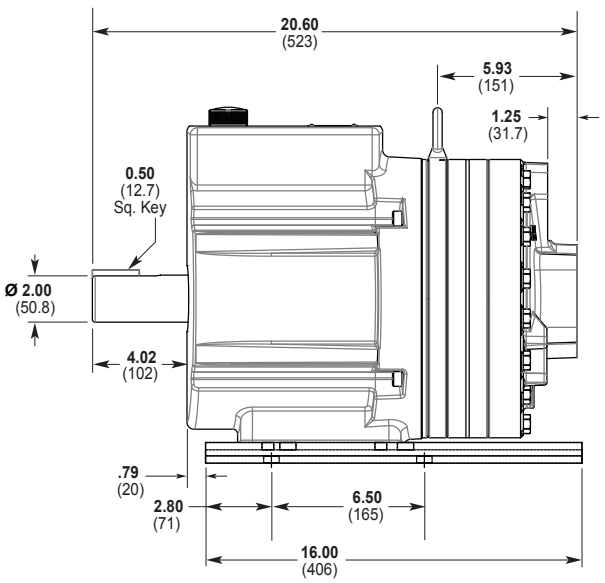

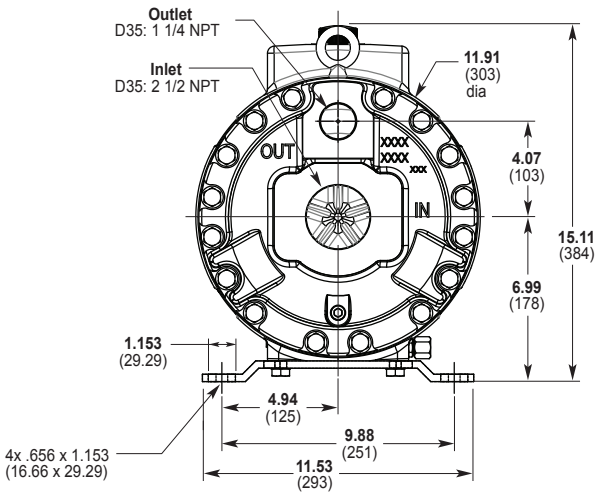

D35 Models with SAE Flange Inlet/Outlet Ports Inches (mm)

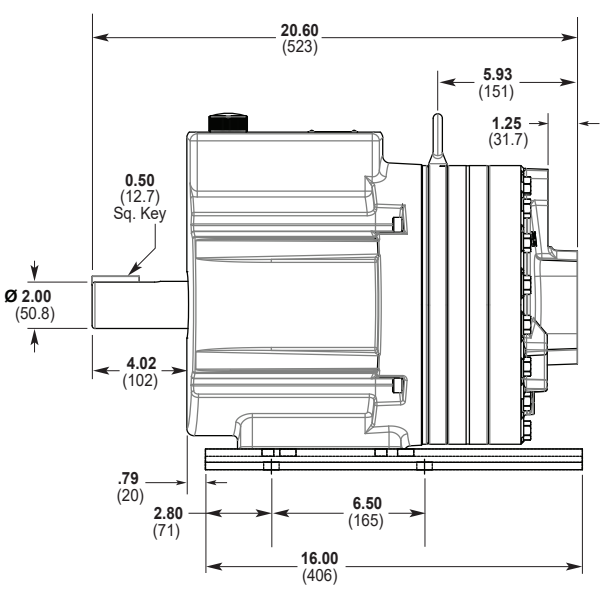

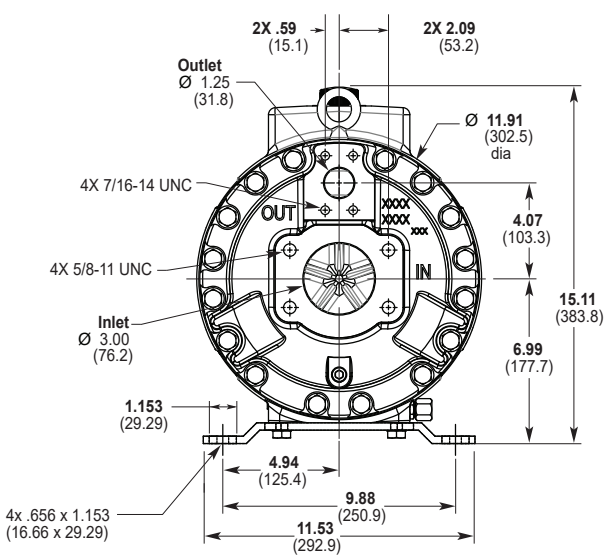

Note: Dimensions are for reference only. Contact factory for certified drawings.

D35 Models with ANSI Flange Inlet/Outlet Ports Inches (mm)

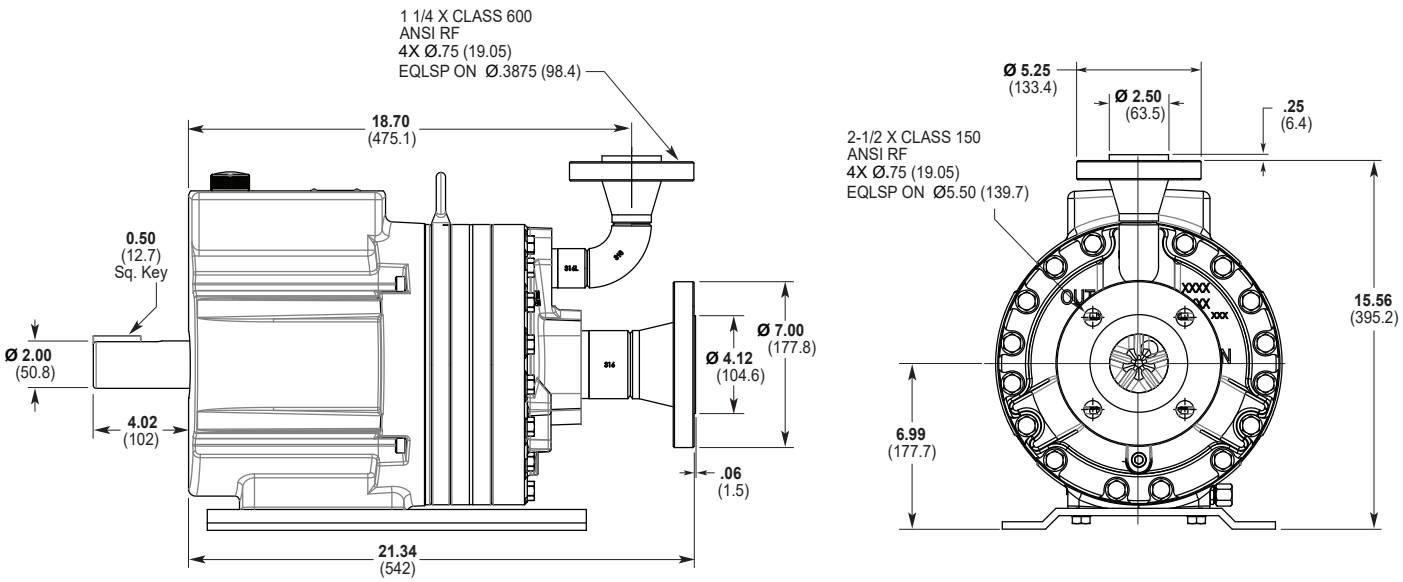

Note: Dimensions are for reference only. Contact factory for certified drawings.

Valve Selection

A seal-less **C64 Pressure Regulating Valve** is recommended for Hydra-Cell Pro D35 pumping systems, especially for high-pressure requirements or when handling dirty fluids.

A **C24 Pressure Regulating Valve** provides a capable, lower-cost alternative to C64 valves for Hydra-Cell Pro D35 pumping systems.

Skid-mounted D35 Pro with 20hp, 3-phase motor.

For complete specifications and ordering information, consult the Hydra-Cell Master Catalog.

D35 Pro Series | How to Order

Ordering Information

A complete D35 Series Model Number contains 12 digits including 9 customer-specified design and materials options, for example: D35XKBTHFECA.

1	2	3	4	5	6	7	8	9	10	11	12
D	3	5									

Digit	Order Code	Description
1-3		**Pump Configuration**
	D35	Shaft-driven (NPT Ports or ANSI Flanges or SAE Flanged Ports)
4		**Hydraulic End Cam**
	X	Max 36.5 gpm (138 l/min) @ 1050 rpm
	E	Max 34.0 gpm (129 l/min) @ 1150 rpm
5		**Pump Head Version**
	K	Kel-Cell NPT Ports or ANSI Flanges
	E	Kel-Cell SAE Flanged Ports
6		**Pump Head Material**
	B	Brass
	C	Ductile Iron (Nickel-plated)
	G	Duplex Alloy 2205 Stainless Steel (with Hastelloy C followers & follower screws)
	Q	316L Stainless Steel ANSI flange class 600 x 1500
	R	316L Stainless Steel ANSI flange class 150 x 600
	S	316L Stainless Steel - threaded or SAE ports
	T	Hastelloy CW12MW
7		**Diaphragm & O-ring Material**
	A	Aflas diaphragm / PTFE o-ring
	E	EPDM (requires EPDM-compatible oil - Digit 12 oil code D)
	G	FKM
	J	PTFE (available with E cam only; 1050 rpm max.)
	P	Neoprene
	T	Buna-N
8		**Valve Seat Material**
	C	Ceramic
	D	Tungsten Carbide (900 rpm max.)
	H	17-4 Stainless Steel
	N	Nitronic 50
	T	Hastelloy C
9		**Valve Material**
	C	Ceramic
	D	Tungsten Carbide (900 rpm max.)
	F	17-4 Stainless Steel
	N	Nitronic 50
	T	Hastelloy C

Digit	Order Code	Description
10		**Valve Springs**
	E	Elgiloy
	H	17-7 Stainless Steel
	T	Hastelloy C
11		**Valve Spring Retainers**
	C	Celcon
	H	17-7 Stainless Steel
	M	PVDF
	P	Polypropylene
	T	Hastelloy C
	Y	Nylon (Zytel)
12		**Hydra-Oil**
	A	10W30 standard-duty oil
	B	40-wt for continuous-duty oil (use with 316L SST or Hastelloy CW12MW pump head - standard)
	D	EPDM-compatible oil
	E	Food-contact oil
	G	5W30 cold-temp severe-duty synthetic oil
	H	15W50 high-temp severe-duty synthetic oil

D35 Pump Housing is standard as Cast Aluminum.
Upgrade to Ductile Iron available.

QUICK & DISCOUNTED PRICING
CLICK HERE
OR CALL (908) 362-9981

D35 Pro Series | Options

Consult the Hydra-Cell Master Catalog for:

- Motors, bases, couplings and other pump accessories
- Hydra-Oil selection and specification information
- Design considerations, installation guidelines, and other technical assistance in pump selection

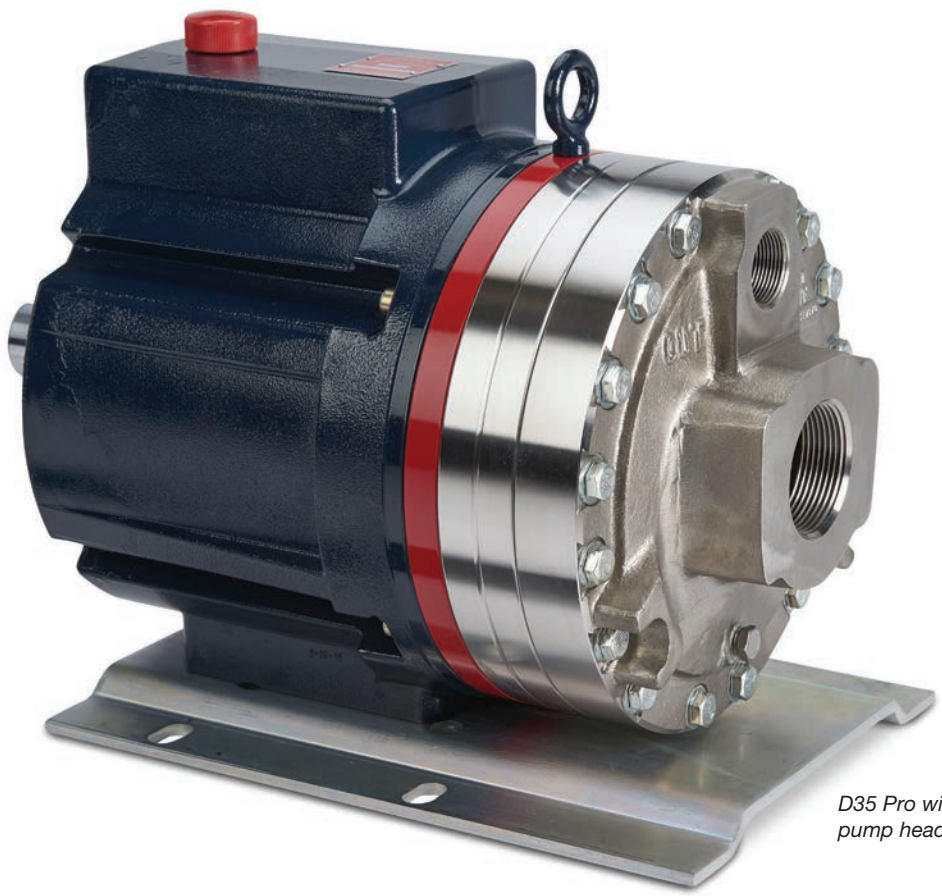

D35 Pro with 316L Stainless Steel pump head.

D35 Pro with Cast Iron pump head.

D35 Pro with Brass pump head.

D35 Pro with 316L Stainless Steel pump head and ANSI flanges.

Installation, Operation & Maintenance

D35-991-2400C

Hydra-Cell®

INDUSTRIAL PUMPS

Models: D35, G35

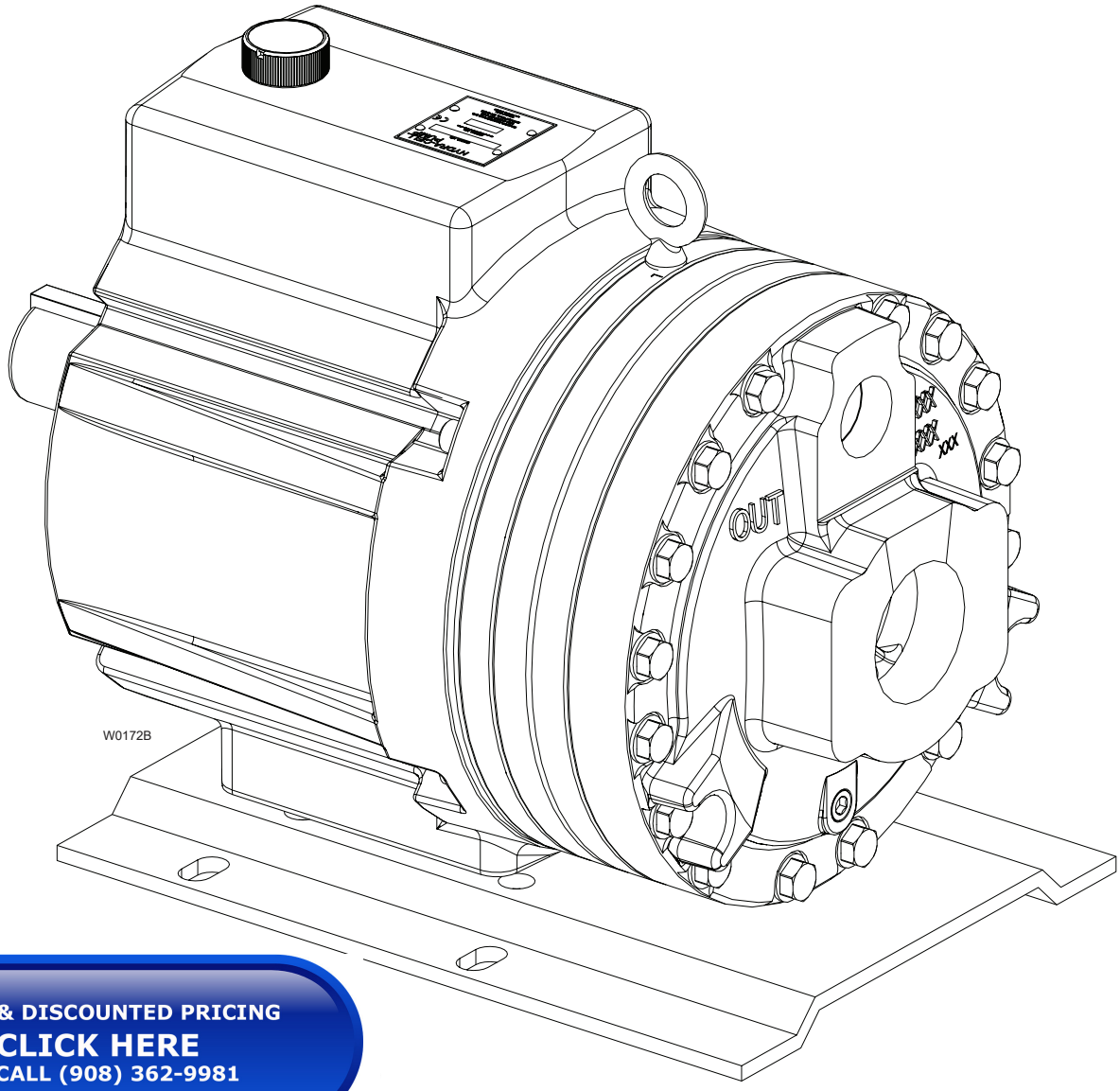

QUICK & DISCOUNTED PRICING
CLICK HERE
OR CALL (908) 362-9981

D/G-35 Contents

	Page
Specifications	2
Dimensions	4
Installation	6
Maintenance	11
Service (Fluid End)	12
Service (Hydraulic End)	15
Troubleshooting	17
Parts	18
Kits	23
Warranty	24

D/G-35 Specifications

Maximum Flow Rate 36.5 gpm (138 l/min)
Max Pressure 1500 psi (103 bar)

Flow Capacities @ 1200 psi (83 bar)

	rpm	gpm	l/min
D/G-35-X	1050	36.5	138
D/G-35-E	1150	34.0	129

Delivery @ 1200 psi (83 bar)

	gal/rev	liters/rev
D/G-35-X	0.0347	0.1314
D/G-35-E	0.0296	0.1120

Delivery @ 1500 psi (103 bar)

	gal/rev	liters/rev
D/G-35-X	0.0330	0.1250

Maximum Discharge Pressure
Metallic Heads: 1500 psi (103 bar) @ 700 rpm

Max Inlet Pressure 250 psi (17 bar) with 1500 psi (103 bar) maximum discharge pressure
500 psi (34 bar) with 1200 psi (83 bar) maximum discharge pressure

Maximum Operating Temperature
250°F (121°C) – consult factory for temperatures above 160°F (71°C) (71˚C) to 250˚F (121˚C).

Maximum Solids Size 800 microns

Inlet Port D35: 2-1/2 inch NPT or 3 inch SAE flange
G35: 2-1/2 inch BSPT

Discharge Port D35: 1-1/4 inch NPT or 1-1/4 inch SAE flange
G35: 1-1/4 inch BSPT

Shaft Diameter	2 inch (50.8 mm)
Shaft Rotation	Reverse (bi-directional)
Bearings	Tapered roller bearings
Oil Capacity	7.75 US quarts (7.33 liters)
Weight	250 lbs (113.4 kg)

Calculating Required Horsepower (kW)*

$$\frac{100 \times rpm}{63{,}000} + \frac{gpm \times psi}{1{,}460} = \text{electric motor HP*}$$

$$\frac{100 \times rpm}{84{,}428} + \frac{lpm \times bar}{511} = \text{electric motor kW*}$$

* rpm equals pump shaft rpm. HP/kW is required application power.

When using a variable frequency drive (VFD) calculate the hp or kW at minimum and maximum pump speed to ensure the correct hp or kW motor is selected. Note that motor manufacturers typically de-rate the service factor to 1.0 when operating with a VFD.

D/G-35 Specifications

Performance

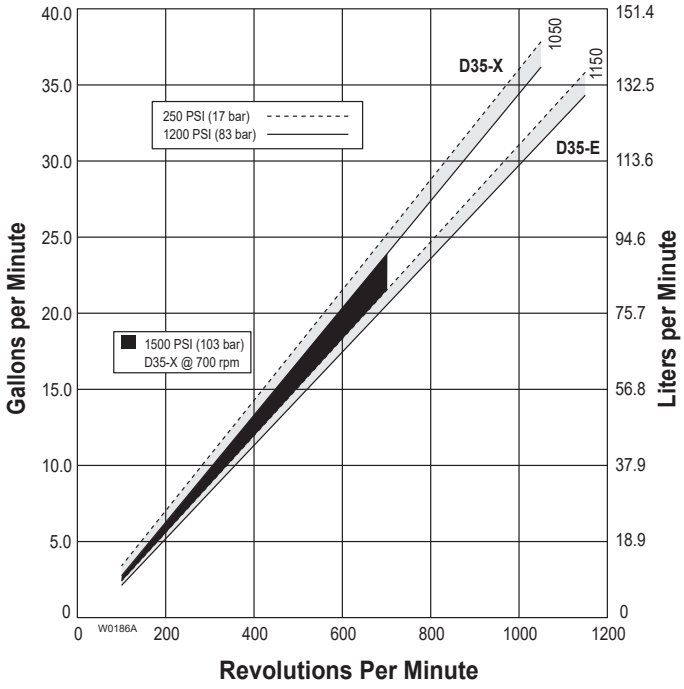

Net Positive Suction Head – NPSHr

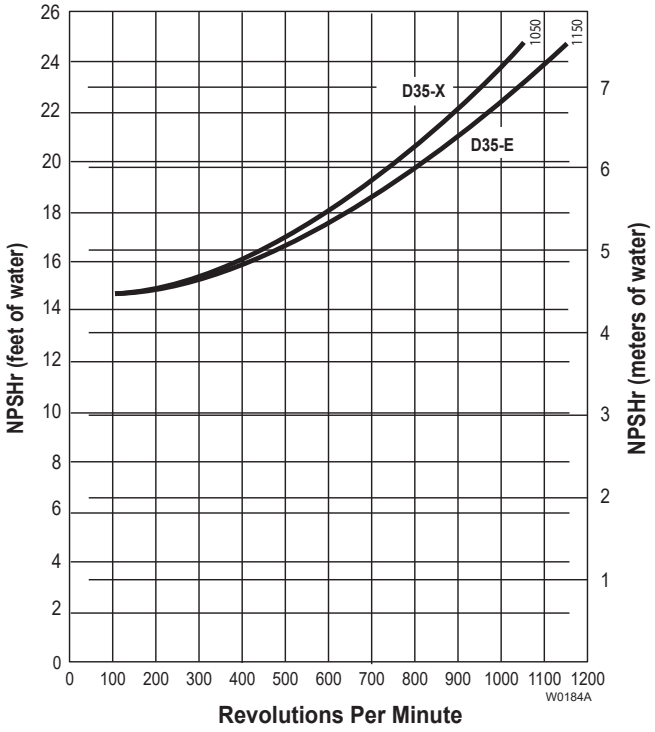

D/G-35 Dimensions

D35 Models with NPT Inlet/Outlet Ports Inches (mm)
G35 Models with BSPT Inlet/Outlet Ports Inches (mm)

Brass

316 Stainless Steel

Ductile Iron, Nickel Plated

Nickel Alloy, Hastelloy

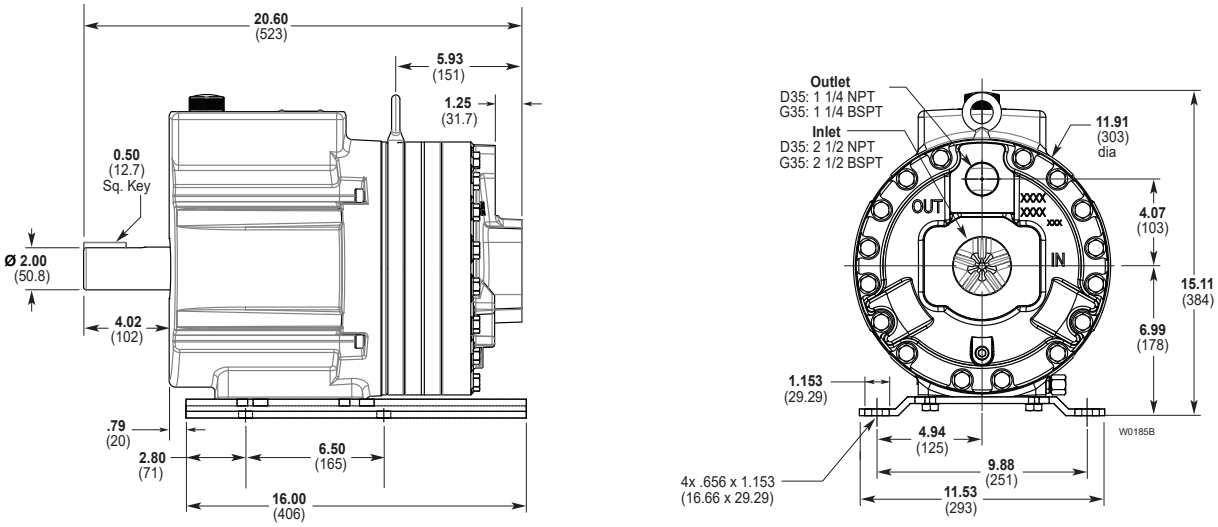

D35 Models with SAE Flange Inlet/Outlet Ports Inches (mm)

Brass

316 Stainless Steel

Ductile Iron, Nickel Plated

Nickel Alloy, Hastelloy

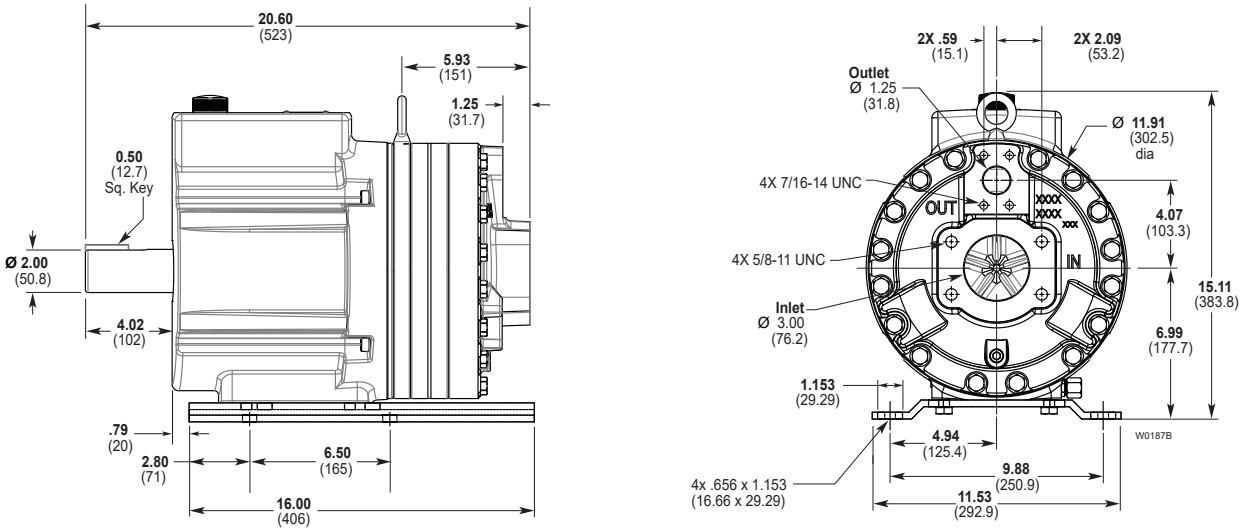

D/G-35 Dimensions

D35 Models with <u>ANSI Flange Inlet/Outlet Ports</u> Inches (mm)

316 Stainless Steel

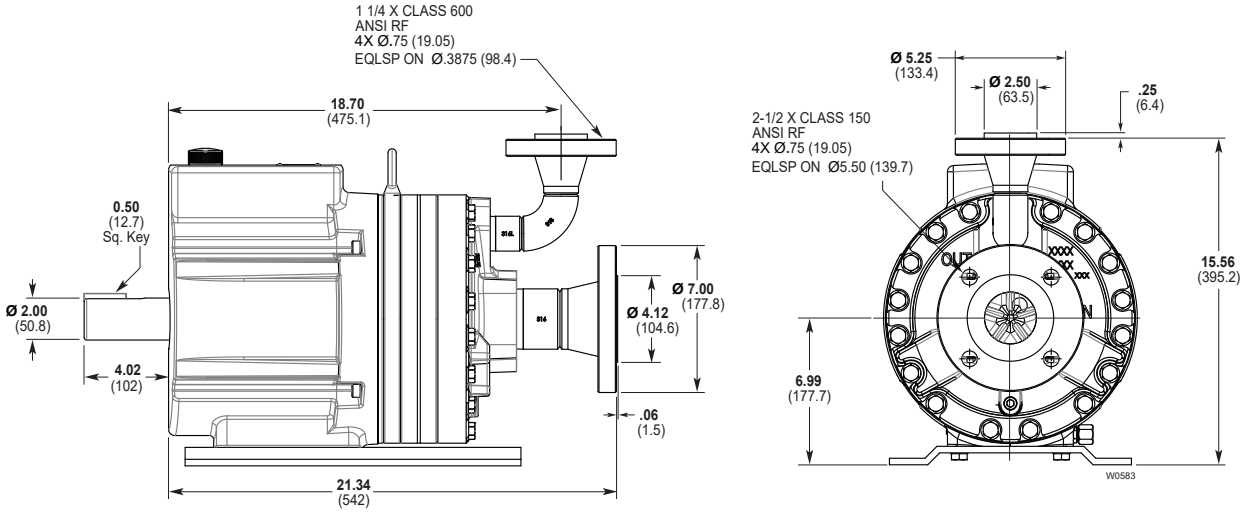

D/G-35 Installation

Safety Precautions

General remarks

These safety / installation instructions contain fundamental information and precautionary notes and must be kept available to all associated with the operation of the pump. Please read them thoroughly prior to installation, electrical connection and commissioning of the unit. It is imperative that all other operating instructions relating to the components of individual units are followed.

These safety / installation instructions do not take local regulations into account. The operator must ensure that such regulations are observed by all, including the personnel carrying out the installation.

Each pump must be labeled by the end user to warn of any hazards that the system process may produce; e.g. corrosive chemicals or hot process etc.

All personnel involved in the operation, maintenance, inspection and installation of the pump must be fully qualified to carry out the work. The personnel's responsibilities, competence and supervision must be clearly defined by the operator. To the extent that if the personnel in question is not already in possession of the requisite know how, appropriate training and instruction must be provided. In addition, the operator is responsible for ensuring that the contents of the operating instructions are fully understood by all the responsible personnel.

When installing a Hydra-Cell pump in conjunction with a motor or motor and frequency controller the relevant manuals must be referred to for electromagnetic compatibility. The installation should conform to EN 61800 and EN 60204 as applicable.

All safety instructions in this manual and all relevant local health and safety regulations must be followed.

Attention must be paid to the weight of the pump before attempting to lift either manually or selecting appropriate lifting equipment.

D/G-35 Installation

Equipment Precautions

Adequate Fluid Supply. To avoid cavitation and premature pump failure, be sure that the pump will have an adequate fluid supply and that the inlet line will not be obstructed. See “Inlet Piping”.

Positive Displacement. This is a positive-displacement pump. To avoid severe system damage if the discharge line ever becomes blocked, install a relief valve downstream from the pump. See “Discharge Piping”. A suitable and calibrated pressure gauge should be installed in the discharge line close to the pump head.

Safety Guards. Install adequate safety guards over all pulleys, belts, and couplings. Follow all codes and regulations regarding installation and operation of the pumping system.

Shut-Off Valves. Never install shut-off valves between the pump and discharge pressure regulator, or in the regulator bypass line.

Freezing Conditions. Protect the pump from freezing. See also the Maintenance Section.

Working Pump. The pump body will become hot during operation even if the liquid being pumped is cold.

Consult the Factory for the following situations:

- Extreme temperature applications – above 160° F (71°C) or below 40° F (4.4°C)
- Pressure feeding of pumps
- Viscous or abrasive fluid applications
- Chemical compatibility problems
- Hot ambient temperatures – above 110° F (43°C)
- Conditions where pump oil may exceed 200° F (93°C) because of a combination of hot ambient temperatures, hot fluid temperature, and full horsepower load — an oil cooler may be required

Location

Locate the pump as close to the supply source as possible. Install it in a lighted clean space where it will be easy to inspect and maintain. Allow room for checking the oil level, changing the oil, and removing the pump head (manifold, valve plate and related items).

Mounting

The pump shaft can rotate in either direction. To prevent vibration, mount the pump and motor securely on a level rigid base.

On a belt-drive system, align the sheaves accurately; poor alignment wastes horsepower and shortens the belt and bearing life. Make sure the belts are properly tightened, as specified by the belt manufacturer.

On a direct-drive system, align the shafts accurately. Unless otherwise specified by the coupling manufacturer, maximum parallel misalignment should not exceed 0.015 in. (0.4 mm) and angular misalignment should be held to 1° maximum. Careful alignment extends life of the coupling, pump, shafts, and support bearings. Consult coupling manufacturer for exact alignment tolerances.

Drive couplings, belts and pulleys must be of suitable design, correctly sized, fitted, and rated for the maximum load required.

On a close-coupled system, coat the motor shaft liberally with anti-seize.

The pump, motor and related components must be adequately grounded.

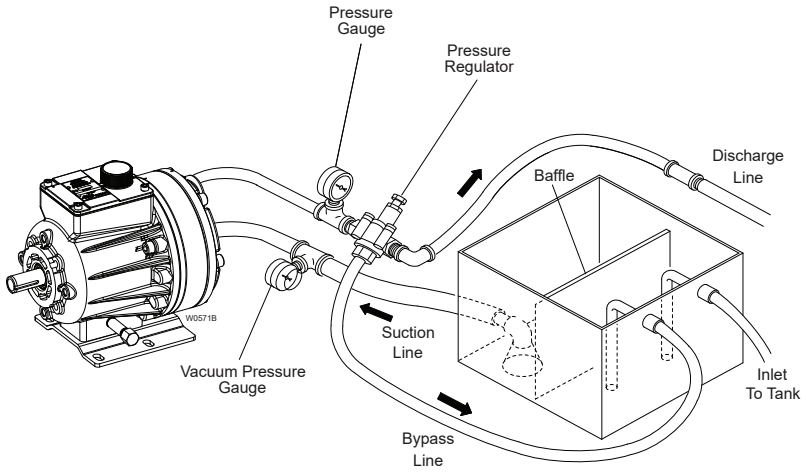

D/G-35 Installation

Inlet Piping (Suction Feed)

CAUTION: When pumping at temperatures above 160° F (71°C), attention must be paid to the vapor pressure curve of the liquid. A pressure-feed system may be required.

Do not supply more than one pump from the same inlet line.

With PTFE diaphragms, the inlet must be flooded.

Install drain cocks at any low points of the suction line, to permit draining in freezing conditions.

Provide for permanent or temporary installation of a vacuum gauge to monitor the inlet suction. To maintain maximum flow, insure the system NPSHa exceeds the NPSHr of the pump.

Supply Tank

Use a supply tank that is large enough to provide time for any trapped air in the fluid to escape. The tank size should be at least twice the maximum pump flow rate.

Isolate the pump and motor stand from the supply tank, and support them separately.

Install a separate inlet line from the supply tank to each pump.

Install the inlet and bypass lines so they empty into the supply tank below the lowest water level, on the opposite side of the baffle from the pump suction line.

Do not use a line strainer or filter in the suction line unless regular maintenance is assured. If a line strainer is used in the system, install it in the inlet line to the supply tank. It should have a free-flow area of at least three times the free-flow area of the inlet.

To reduce aeration and turbulence, install a completely submerged baffle plate to separate the incoming and outgoing liquids.

Install a vortex breaker in the supply tank, over the outlet port to the pump.

Place a cover over the supply tank, to prevent foreign objects from falling into it.

Hose and Routing

Size the suction line at least one size larger than the pump inlet, and so that the velocity will not exceed 1-3 ft/sec (0.3 to 0.9 m/s):

For pipe in mm: Velocity (m/sec) = 21.2 x LPM/Pipe ID^2

For pipe in inches: Velocity (ft/sec) = 0.408 x GPM/Pipe ID^2

Keep the suction line as short and direct as possible. A maximum of 1m (3 feet) is recommended.

Use flexible hose and/or expansion joints to absorb vibration, expansion, or contraction.

If possible, keep the suction line level. Do not have any high points to collect vapor unless these high points are vented.

To reduce turbulence and resistance, do not use 90° elbows. If turns are necessary in the suction line, use 45° elbows or arrange sweeping curves in the flexible inlet hose.

If a block valve is used, be sure it is fully opened so that the flow to the pump is not restricted. The opening should be at least the same diameter as the inlet plumbing ID.

Install piping supports where necessary to relieve strain on the inlet line and to minimize vibration.

Inlet Piping (Pressure Feed)

Provide for permanent or temporary installation of a vacuum/pressure gauge to monitor the inlet vacuum or pressure. Pressure at the pump inlet should not exceed 250 psi (17 bar) @ 1500 psi (103 bar) discharge; or 500 psi (34 bar) @ 1200 psi (83 bar) discharge. If pressure could go higher, install an inlet pressure reducing regulator. Do not supply more than one pump from the same inlet line.

Inlet Calculations

Acceleration Head

Calculating the Acceleration Head

Use the following formula to calculate acceleration head losses. Subtract this figure from the NPSHa, and compare the result to the NPSHr of the Hydra-Cell pump.

Ha = (L x V x N x C) ÷ (K x G)

where:

Ha = Acceleration head (ft of liquid)

L= Actual length of suction line (ft) — not equivalent length

V= Velocity of liquid in suction line (ft/sec)

$$\text{or } V = GPM \left(\frac{0.408}{\text{Pipe ID}^2} \right)$$

N= RPM of crank shaft

C= Constant determined by type of pump — Use 0.066 for D/G03, M03, M23, G13, D/G10, D/G04 and H/G25 pumps. Use 0.04 for D/G35 and D/G15 pumps. Use 0.628 for F/G20/21/22 pumps.

K= Constant to compensate for compressibility of the fluid — use: 1.4 for de-aerated or hot water; 1.5 for most liquids; 2.5 for hydrocarbons with high compressibility

G= Gravitational constant (32.2 ft/sec^2)

Friction Losses

Calculating Friction Losses in Suction Piping

When following the above recommendations (under “inlet Piping”) for minimum hose/pipe I.D. and maximum length, frictional losses in the suction piping are negligible (i.e., Hf = 0) if you are pumping a water-like fluid.

When pumping more-viscous fluids such as lubricating oils, sealants, adhesives, syrups, varnishes, etc., frictional losses in the suction piping may become significant. As Hf increases, the available NPSH (NPSHa) will decrease, and cavitation will occur.

In general, frictional losses increase with increasing viscosity, increasing suction-line length, increasing pump flow rate, and decreasing suction-line diameter. Changes in suction-line diameter have the greatest impact on frictional losses: a 25% increase in suction-line diameter cuts losses by more than two times, and a 50% increase cuts losses by a factor of five times.

Consult the factory before pumping viscous fluids.

Minimizing Acceleration Head and Frictional Losses

To minimize the acceleration head and frictional losses:

- Keep inlet lines less than 1 m (3 ft) long.

- Use inlet hose at least one size larger than the size of the inlet port of the pump.
- Use flexible, non-collapsible suction hose and/or expansion joints to absorb vibrations, expansions and contractions.
- Minimize fittings (elbows, valves, tees, etc.)
- **Use a suction stabilizer on the inlet.**

Net Positive Suction Head

NPSHa must be equal to or greater than NPSHr. If not, the pressure in the pump inlet will be lower than the vapor pressure of the fluid— and cavitation will occur.

Calculating the NPSHa

Use the following formula to calculate the NPSHa:

NPSHa = Pt + Hz - Hf - Ha - Pvp

where:

Pt = Atmospheric pressure

Hz = Vertical distance from surface liquid to pump center line (if liquid is below pump center line, the Hz is negative)

Hf = Friction losses in suction piping

Ha = Acceleration head at pump suction

Pvp = Absolute vapor pressure of liquid at pumping temperature

Notes:

- In good practice, NPSHa should be 2 ft (0.6 m) greater than NPSHr.
- All values must be expressed in feet of liquid.

Atmospheric Pressure at Various Altitudes

Altitude (ft)	Pressure (ft of H_2O)	Altitude (ft)	Pressure (ft of H_2O)
0	33.9	1500	32.1
500	33.3	2000	31.5
1000	32.8	5000	28.2

Discharge Piping

Note: Consult the Factory before manifolding two or more pumps together.

Hose and Routing

Use shortest, most-direct route for discharge line.

Select pipe or hose with **working pressure** rating of at least 1.5 times maximum system pressure. EXAMPLE: Select a 1500-psi W. P.-rated hose for systems to be operated at 1000-psi-gauge pressure.

Use about 6 ft (1.8 m) of flexible hose between pump and rigid piping to absorb vibration, expansion or contraction.

Support pump and piping independently. Size discharge line so that velocity of fluid will not exceed 2-3 m/sec (8-10 ft/sec):

For pipe in mm: Velocity (m/sec) = 21.2 x LPM/Pipe ID^2

For pipe in inches: Velocity (ft/sec)

$$\text{or } V = 0.408 \left(\frac{GPM}{\text{Pipe } ID^2} \right)$$

Note: Pumps with non-metallic pumping head are limited to 17 bar (250 psi) maximum working pressure rating.

Pressure Regulation

Install pressure regulator or unloader in discharge line. Bypass pressure must not exceed pressure limit of pump.

Size regulator so that, when fully open, it will be large enough to relieve full capacity of pump without over pressurizing the system.

Locate regulator as close to pump as possible and ahead of any other valves.

Adjust pressure regulator valve to no more than 10% over maximum working pressure of system. Do not exceed manufacturer's pressure rating for pump or regulator.

Route the bypass line to the supply tank, not to the suction line (to reduce the chance of turbulence and cavitation within the pump).

If the pump may be run for a long time with the discharge closed and fluid bypassing, install a thermal protector in the bypass line (to prevent severe temperature buildup in the bypassed fluid).

The safety, pressure regulating valve must be checked for correct operation on a regular basis.

CAUTION: *Never* install shutoff valves in the bypass line or between the pump and pressure regulator or relief valve.

Provide for permanent or temporary installation of pressure gauge to monitor discharge pressure at pump.

For additional system protection install safety relief valve in discharge line downstream from pressure regulator.

D/G-35 Installation

Before Initial Start-Up

Before you start the pump, be sure that:

- All shut-off valves are open, and pump has adequate supply of fluid.
- All connections are tight.
- The oil is at the correct level. (See list below):

  D/G10 - ¼ in. (6 mm) from the bottom of the fill port.

  D/G04, G/H25, D/G15, D/G35 - ¼ in. (6mm) above the cast surface in the upper oil reservoir.

  F/G20/21/22 - The oil reservoir beneath the reservoir diaphragm is completely full. Note: The reservoir is filled and sealed at the factory. If you are unsure about the oil level, remove the cover and slowly lift the diaphragm. Refer to Service Procedure #6, “Fill and Seal the Oil Reservoir”, in the Fluid-End Service Section.

  D/G03 - The oil level should be 3/4 in. (20 mm) from the top of the fill port.
- The relief valve on the pump outlet is adjusted so the pump starts under minimum pressure.
- All pulleys and belts are properly aligned, and belts are tensioned according to specification.
- All pulleys and belts have adequate safety guards.
- Ensure that the materials of construction of the pump are compatible with the liquid being pumped.

Initial Start-Up Procedure

1. Turn on power to pump motor.
2. Check inlet pressure or vacuum. To maintain maximum flow, inlet vacuum must not exceed 180 mm Hg at 21°C (7 in. Hg at 70° F). Inlet pressure must not exceed 250 psi (17 bar) @ 1500 psi (103 bar) discharge; or 500 psi (34 bar) @ 1200 psi (83 bar) discharge.
3. Listen for any erratic noise and look for unsteady flow.
4. If system has airlock and pump fails to prime:

   a. Turn off power.

   b. Remove pressure gauge or plug from tee fitting at pump outlet (refer to illustration drawing at the front of this section).

   Note: Fluid may come out of this port when the plug is removed. Provide an adequate catch basin for fluid spillage, if required. Fluid will come out of this port when the pump is started, so we recommend that you attach adequate plumbing from this port so fluid will not be sprayed or lost. Use high-pressure-rated hose and fittings from this port. Take all safety precautions to assure safe handling of the fluid being pumped.

   c. Jog system on and off until fluid coming from this port is air-free.

   d. Turn off power.

   e. Remove plumbing that was temporarily installed, and reinstall pressure gauge or plug.
5. Adjust discharge pressure regulator to desired operating and bypass pressures. Do not exceed maximum pressure rating of pump.
6. After pressure regulator is adjusted, set safety relief valve at 7 bar (100 psi) higher than desired operating pressure. To verify this setting, adjust discharge pressure regulator upward until relief valve opens. Follow recommendations in **Step 4b Note** for handling fluid that will come from relief valve.
7. Reset discharge pressure regulator to desired system pressure.
8. Provide return line from relief valve to supply tank, similar to bypass line from pressure regulator.

D/G-35 Maintenance

Note: The numbers in parentheses are the Reference Numbers on the exploded view illustrations found in this manual and in the Parts Section.

Daily

Check oil level and condition of oil.

For correct oil level, see list below:

D/G10 - ¼ in. (6 mm) from the bottom of the fill port.

D/G04, G/H25, D/G15, D/G35 - ¼ in. (6mm) above the cast surface in the upper oil reservoir.

F/G20/21/22 - The oil reservoir beneath the reservoir diaphragm is completely full. Note: The reservoir is filled and sealed at the factory. If you are unsure about the oil level, remove the cover and slowly lift the diaphragm. Refer to Service Procedure #6, "Fill and Seal the Oil Reservoir", in the Fluid-End Service Section.

D/G03 - The oil level should be 3/4 in. (20 mm) from the top of the fill port.

Use the appropriate Hydra-Oil for the application (contact Wanner Engineering if in doubt).

CAUTION: If you are losing oil but don't see any external leakage, or if the oil becomes discolored and contaminated, one of the diaphragms (21) may be damaged. Refer to the Fluid-End Service Section. Do not operate the pump with a damaged diaphragm.

CAUTION: Do not leave contaminated oil in the pump housing or leave the housing empty. Remove contaminated oil as soon as discovered, and replace it with clean oil.

Periodically

Change the oil after the first 100 hours of operation, and then according to the guidelines below.

Hours Between Oil Changes @ Various Process Fluid Temperatures

Pressure	RPM	<90°F (32°C)	<139°F (60°C)	<180°F (82°C)
Metallic Pump Head				
<800 psi (56 bar)	<800	6,000	4,000	2,000
	<1200	3,000	2,000	1,500
<1200 psi (83 bar)	<800	3,000	2,000	1,500
	<1200	1,500	—	1,000
<1500 psi (103 bar)	<700	1,500	1,500	1,000

Note: Minimum oil viscosity for proper hydraulic end lubrication is 16-20 cST (80-100 SSU).

Note: Use of an oil cooler is recommended when process fluid and/or hydraulic end oil exceeds 180°F (82°C).

When changing, remove the pipe cap (36) at the bottom of the pump so all oil and accumulated sediment will drain out.

CAUTION: Do not turn the drive shaft while the oil reservoir is empty.

Check the inlet pressure or vacuum periodically with a gauge. If vacuum at the pump inlet exceeds 7 in. Hg (180 mm Hg), check the inlet piping system for blockages. If the pump inlet is located above the supply tank, check the fluid supply level and replenish if too low.

CAUTION: Protect the pump from freezing. Refer also to the "Shutdown Procedure".

Shutdown Procedure During Freezing Temperatures

Take all safety precautions to assure safe handling of the fluid being pumped. Provide adequate catch basins for fluid drainage and use appropriate plumbing from drain ports, etc., when flushing the pump and system with a compatible antifreeze.

1. Adjust discharge pressure regulating valve so pump runs under minimum pressure. Stop pump.
2. Drain supply tank; open any draincocks in system piping and collect drainage; remove plug (1) from manifold and collect drainage.
3. Close draincocks in system piping and replace manifold plug.
4. Fill supply tank with enough antifreeze to fill system piping and pump.

   Note: Disconnect the system return line from the supply tank and connect it to a separate reservoir.
5. Start pump and allow it to run until system is filled with antifreeze.

   Note: If the system has an air lock and the pump fails to prime, follow step 4 of the Initial Start-up Procedure to clear the air.
6. When mostly antifreeze is flowing from system return line, stop pump. Connect system return line back to supply tank and circulate antifreeze for short period.
7. It is also good practice to change oil in hydraulic end before storage for an extended period. This will remove any accumulated condensation and sediment from oil reservoir. Drain and refill hydraulic end with appropriate Hydra-Oil and operate pump for short period to assure smooth performance.

D/G-35 Service (Fluid End)

Note: The reference numbers in parentheses are shown in the Fluid End Parts List.

This section explains how to disassemble and inspect all easily-serviceable parts of the pump fluid end.

CAUTION: Disassembly of the hydraulic end of the pump should be performed only by a qualified technician. For assistance, contact Wanner Engineering (612-332-5681) or the distributor in your area.

CAUTION: Do not remove the four socket head cap screws (31) that go through the back of the pump housing (37) and thread into the cylinder housing (23), unless you are repairing the hydraulic end of the pump.

Tools and Supplies

The following tools and supplies are recommended for servicing the fluid end of the pump:

- Wanner D35/G35 Tool Kit, P/N A03-200-1100
- 18-mm hex socket
- 18-mm box-end wrench
- Two 19-mm open-end wrenches
- Large Phillips-head screwdriver
- Mallet
- Torque wrench to 70 ft-lbs (100 N-m)
- New oil
- Lubricating gel
- Fine emery cloth

The following additional supplies are recommended for servicing the hydraulic end of the pump:

- 17-mm hex socket or box-end wrench
- Grease
- Anaerobic seal sealant

1. Remove Manifold and Valve Plate (4, 17)

a. M**anifold**. Using 18-mm hex socket and 18-mm box-end wrench, remove 16 cap screws (2). **Do not remove** four socket head cap screws (31). Remove manifold.

Note: When you remove the valve plate in the following step, some oil will leak out from behind the diaphragms. Provide something to catch this oil leakage.

b. **Valve Plate**. Re-insert two perimeter cap screws (2) through pump housing from shaft end at approximately 2 and 10 o'clock positions, to hold valve plate when five cap screws (15) are removed. Using 10-mm hex wrench, remove five socket head cap screws and valve plate.

CAUTION: Don't turn the pump drive shaft while the manifold and valve plate are off the pump, except when removing diaphragms or repriming the hydraulic cells.

c. Inspect manifold for warping or wear around inlet and outlet ports. If wear is excessive, replace manifold.

Inspect valve plate in same manner.

2. Inspect Valves (8-14)

Note: Wanner Valve Kits include items 8 - 14 and all O-rings for sealing the manifold to the valve plate.

The five inlet and five outlet valve assemblies are identical, but face in opposite directions. Inspect each valve as follows:

a. Check spring retainer (14), and replace if worn or damaged.

b. Check valve spring (12). If it is worn or shorter than new spring, replace it.

c. Check valve (11) for wear or damage. If worn excessively, replace it.

Note: If your pump has plastic spring retainers, there is a tetra seal (flat O-ring) (13) between spring retainer (14) and valve seat (10). Pumps with metal spring retainers do not have tetra seal.

d. Check dampening washer (8), and replace if damaged.

e. Remove valve seat (10). Seat Puller Tool is included in Wanner Tool Kit. Inspect valve seat for wear and replace if worn. Install new O-ring (9).

Note: Whenever you replace any worn valve or valve seat, we recommend that you replace all valve assemblies to ensure reliable operation. All necessary parts are included in the Valve Kit.

f. Reinstall valve assemblies:

• Clean valve ports and shoulders with emery cloth, and lubricate with lubricating gel or petroleum jelly.

CAUTION: If the elastomers are EPDM material, do not use a petroleum-based lubricant on them. Instead, use an EPDM-compatible lubricant. If the product is food-grade, use a compatible food-grade lubricant.

• Install O-ring (9) on valve seat (10), and lubricate. Do this on remaining valve seats.

• **Inlet Valves (five center valves**). Insert spring retainer (14) into valve plate (17), then insert spring (12) into spring retainer (14). If pump has plastic spring retainers (14), insert tetra seal (13) between retainer and valve seat (10). Insert valve (11) on top of valve spring (12), then insert valve seat (10). Side of valve seat that has deepest chamfer should face valve. Finally, insert dampening washer (8). A compatible grease or oil will help dampening washer stick to valve seat (10) for easier assembly.

• **Outlet Valves (five outer valves)**. Insert dampening washer (8), valve seat (10), valve (11), and spring (12), then spring retainer (14). If pump has plastic retainers, install tetra seal (13) between valve seat (10) and spring retainer (12).

D/G-35 Service (Fluid End)

3. Inspect and Replace Diaphragms (21)

a. Lift diaphragm (21) by one edge, and turn pump shaft until diaphragm pulls up. This will expose machined cross-holes in valve plunger (69) behind diaphragm.

b. Insert the Valve Plunger Holder (from Wanner Tool Kit) through one of cross-holes to hold diaphragm up.

c. Grasp Valve Plunger Holder so valve plunger (69) won't rotate. Remove screw (18), O-ring (19), and follower (20) from center of diaphragm.

d. Remove diaphragm and inspect carefully.

Note: A damaged diaphragm generally indicates a pumping system problem, and replacing only the diaphragm will not solve the larger problem.

Inspect diaphragm for the following:

• **Half-moon marks**. Usually caused by cavitation of the pump (see Troubleshooting).

• **Concentric circular marks**. Usually caused by cavitation of the pump (see Troubleshooting).

• **Small puncture**. Usually caused by a sharp object in the fluid, or by an ice particle.

• **Diaphragm pulled away** from the center screw or from the cylinder sides. Usually caused by fluid being frozen in the pump, or by over pressurization of the pump.

• **Slice in ridge of diaphragm**. Usually occurs when a diaphragm is operated at temperatures below its rated capability.

• **Diaphragm edge chewed away**. Usually caused by over pressurizing the system. Could also be caused by the center and exterior cap screws not being torqued to their correct values.

e. Inspect plunger (22) for rough surfaces or edges. **Do not remove** plunger from valve plunger (69).

CAUTION: If a diaphragm was damaged and foreign material or water has entered the oil reservoir, do not operate the pump. Check all diaphragms, then flush the reservoir completely (as outlined below) and refill it with fresh oil. Never let the pump stand with foreign material or water in the reservoir, or with the reservoir empty.

f. Install new diaphragm (21) ridge-side out.

Note: It is recommended to not reuse old diaphragms, because the material may have taken a compression set and thus will not seal properly.

g. Clean screw (18), follower (20), and threads in valve plunger (69). Remove any oil from valve plunger. Apply medium-strength threadlocker to screw (18). Re-install screw, O-ring (19), and follower. Tighten screw to 43 in-lbs (485 N-cm).

h. Repeat above inspection and replacement procedure with remaining four diaphragms.

4. Flush Contaminate from Hydraulic End

(only if a diaphragm has ruptured)

a. With valve plate and manifold still removed (see above), remove oil drain cap (36). Allow all oil and contaminate to drain out.

b. Fill reservoir with compatible solvent. Manually turn pump shaft to circulate compatible solvent and drain. Dispose of contaminated fluid properly.

CAUTION: If you have an EPDM diaphragm, or if food grade oil is in the reservoir, do not use kerosene or solvents. Instead, flush with the same lubricant that is in the reservoir.

c. Repeat step b. flushing procedure.

d. Fill reservoir with fresh oil and manually turn pump shaft to circulate oil. Drain oil.

e. Refill reservoir with fresh oil. If oil appears milky, there is still contaminant in reservoir. Repeat steps c and d until oil appears clean.

5. Priming Hydraulic Cells

Note: Providing oil prime to fitted pumps requires pressure be applied to the diaphragms. This can be done manually, with the system head pressure, or with pressurized air if available. Review all methods below to determine the procedure most suitable.

Method 1 (system head pressure *less* than 2 psi)

a. Install valve plate (17) with outlet valves not installed (or else remove outlet valves and leave seats installed) on cylinder housing (23). Tighten two socket head screws (31).

b. Fill reservoir with correct Hydra-oil to fill port.

c. With blunt pointer (eraser end of pencil), reach in through each outlet valve port and push diaphragm (21) backwards. Note air bubbles coming out at oil fill port. Now turn shaft about 1/2 turn.

d. Repeat depressing diaphragms (21) and rotating shaft (approximately 4 to 6 times) until no more air bubbles escape and oil has dropped about 1 inch (25 mm) from top of fill port. Hydraulic cells are now primed. Replace oil fill cap with O-ring (28).

e. Install outlet valve assemblies in each outlet valve port. See Parts List for correct assembly order. If necessary, tip pump (head upward) to keep valve (11) centered on valve seat (10) and allow valve retainer (14) to fit into port flush.

f. Install manifold (4) and complete installation.

Alternative Method 1: (system head pressure *less* than 2 psi)

a. With pump horizontal, and the fluid-end head removed, fill reservoir with correct Hydra-oil to fill port.
b. Have catch basin for oil that leaks from behind diaphragms when priming. Catch oil and dispose of properly. **Do not reuse oil.**
c. All air in oil within hydraulic piston behind diaphragms (21) must be forced out by turning shaft (and pumping piston). A shaft rotator is included in the Hydra-Cell Tool Kit. Keep pressure on diaphragms while turning shaft until bubble-free flow of oil comes from behind all diaphragms. Maintain oil level in reservoir. Do not allow oil level to be lower than reservoir.
d. Before oil runs out past diaphragms (21), quickly attach loaded valve plate (17) with socket head screws (31). Do not tighten screws completely. Leave gap between valve plate and the cylinder housing (23). Turn shaft 2-3 turns to finish forcing out air behind diaphragms. Hydraulic cells are now primed. Finish tightening valve plate with two socket head screws (31) and add pump manifold (4).
e. Wipe excess oil from around pump head.
f. Check that oil level is 1 inch (25 mm) from top of fill port.
g. Replace oil fill cap with O-ring (28) and complete installation.

Method 2 (head pressure *greater* than 2 psi)

This simple and clean method of priming Hydra-cells requires an inlet head pressure of at least 5 feet (1.5 m) or 2 psi (0.14 bar). The pressure holds the diaphragms back while the piston forces the air out.

a. Completely assemble pump and fill reservoir with correct Hydra-oil to fill port.
b. **When tank head pressure is being used to prime**, install pump back into system and connect tank supply line to pump inlet.

   Note: The pump discharge line may be connected at this time. However, make sure the end of the discharge line is open to let air pass out.
c. Slowly turn pump shaft by hand and watch for bubbles exiting oil reservoir fill opening. This will take several rotations; when no more bubbles come out and reservoir level has dropped about 1" (25 mm), hydraulic cells are primed.
d. Replace oil fill cap with O-ring (28) and complete installation.
e. **When compressed air is being used to prime**, insert clean air hose to pump inlet and restrict pump outlet. Turn shaft quarter turn and then apply air pressure into manifold to put pressure on diaphragms (21). This will force air out from inside pistons. Observe for bubbles at reservoir opening. Repeat for several rotations until no more air bubbles come out and reservoir level has dropped about 1" (25 mm). Hydraulic cells are now primed.
f. Replace oil fill cap with O-ring (28) and complete installation.

6. Reinstall Valve Plate and Manifold (4, 17)

a. Reinstall valve plate (17), with valve assemblies installed as outlined above, onto cylinder housing (23).
b. Insert two perimeter cap screws (2) at 10 and 2 o'clock positions, through pump housing (37) from shaft end, and then through cylinder housing and valve plate. The cap screws are used to hold the valve plate and manifold during reassembly.
c. Place high collar washer (16) on each socket head cap screw (15), and install through valve plate. Then thread into cylinder housing. Before tightening cap screws, install at least ten of perimeter cap screws (2) through valve plate and cylinder housing holes to ensure good alignment. Using 10-mm hex socket and torque wrench, torque five cap screws (15) to 65 ft-lbs (88 N-m). Remove ten perimeter cap screws.
d. Reinstall O-rings (5,6,7) on rear side groves of manifold (4). Use compatible petroleum jelly or lubricating gel to hold in place.

   Note: If this is a food-grade application or using EPDM elastomers, be sure the lubricating gel is compatible with the application.
e. Reinstall the manifold (4) onto valve plate (17). Be sure drain plug (1) is installed in manifold.
f. Insert 16 cap screws (2) and 16 washers (3) around edge of manifold. Use 18-mm hex socket and to alternately tighten opposite cap screws until secure. Torque to 65 ft-lbs (88 N-m).

D/G-35 Service (Hydraulic End)

Note: The numbers in parentheses are the Reference Numbers on the exploded view illustrations found in the Parts Section.

CAUTION: Do not disassemble the hydraulic end of the pump unless you are a skilled mechanic. For assistance, contact Wanner Engineering (TEL 612-332-5681 or FAX 612-332-6937) or the distributor in your area.

CAUTION: The four socket head cap screws (31) that screw through the back of the pump housing (37) into the cylinder housing (23) hold these parts together. *Do not remove* these four screws except when repairing the hydraulic end.

Note: The following service procedures refer several times to the Wanner D/G-35 Tool Kit. We strongly urge you not to try to repair the hydraulic end of the pump without using the tools in this kit (available from Wanner or your local distributor). Refer also to the list of tools and supplies in the Fluid-End Service Section.

1. Remove Pump Housing

a. Remove manifold (4), valve plate (17), and diaphragms (21), from pump housing (37). Refer to Fluid-End Service Section

b. Drain oil from pump housing by removing drain plug (36). Dispose of oil properly.

c. Check shaft assembly (61) for sharp burrs. Smooth any burrs, to prevent scarring seals (62) when removing shaft assembly.

d. Reinsert two cap screws (2) through pump housing (37) and cylinder housing (23) from shaft assembly end (at 10 and 2 o'clock positions) to support parts as pump is being disassembled. Install shaft rotator (from D/G-35 Tool Kit) over shaft assembly. Push shaft rotator on all the way, so front of shaft rotator touches pump housing. Tighten shaft rotator set screw into keyway. This keeps shaft assembly (61) attached to pump housing (37) when cylinder housing (23) is removed.

e. Using three assembly studs from the (from D/G-35 Tool Kit), insert them (equally spaced) through pump housing flange (37) and cylinder housing (23). Tighten nuts to within 3/4 in. (17 mm) from cylinder housing.

Note: The assembly studs will catch the cylinder housing as it is unbolted and allow the cylinder housing to be removed slowly under spring tension.

f. Remove four cap screws (31) from cylinder housing (23). Slide cylinder housing out on two cap screws (2) that were inserted for support in Step d above.

Note: The preload on the piston return springs will push the cylinder housing out of the pump housing. Remove the cylinder housing assembly.

g. Remove shaft assembly (61) by loosening set screw in the shaft rotator and sliding the shaft assembly out of seals (59).

CAUTION: These parts are heavy and may need a second person or a lifting device to remove them.

h. Remove bearing adjustment plate (57) and inspect the bearing cup (61B) from the cylinder housing (23). Inspect all parts for wear, and replace if necessary.

i. Inspect cam, bearings, and bearing cup (61B) in the pump housing (37).

Note: If the bearings are pitted or binding, or if the bearing cup in the housing is worn, contact Wanner Engineering.

CAUTION: If a bearing cup or bearing cone is replaced, they must be replaced as a pair or premature failure will result.

2. Disassemble Pistons

a. Place cylinder housing assembly (23) on clean flat surface, with piston-feet side down.

b. With diaphragms (21) removed (see the Fluid-End Service Section), thread screw (18) approximately three turns into one of valve plungers (69). Tap screw lightly with hammer, and plunger (22) should slip off the valve plunger. Remove screw (18). Piston assembly (74) can then be removed. Repeat for remaining cylinders.

c. Inspect and clean all parts of piston assembly (74). Replace O-rings and any other parts that are worn or damaged. Repeat on remaining piston assemblies.

3. Reassemble Pistons

Note: When reassembling the hydraulic pistons, use new plungers (22). They are press-fit onto the valve plungers (69) and are not reusable.

a. Drop steel ball (72) into bottom of piston assembly (73).

Note: Using grease on the O-rings, and lubricating the parts, will aid in assembly.

b. Insert retaining washer (71) and O-ring (66) to hold steel ball in place.

c. Insert valve plunger (69) into valve cylinder (70). Slide spring (68) over valve plunger (69) inside valve cylinder (70).

d. Insert O-ring (67) into spring retainer (65).

e. Install two O-rings (67) onto valve cylinder (70).

f. Install O-ring (66) onto spring retainer (65).

g. Slide assembled valve cylinder (70), valve plunger (69), and spring (68) into spring retainer (65).

h. Slide complete cylinder-and-retainer assembly into piston assembly (73).

i. Insert piston return spring (64) into piston assembly (73).

j. Repeat steps a. through i. for remaining four piston assemblies.

4. Remove Shaft Seals (62)

Inspect shaft seals (62). Replace if they look damaged in any way. Remove shaft seals by pounding out from inside pump housing (37). Replace both shaft seals. Clean bore of pump housing with emery cloth.

5. Reassemble Pump Housing, Shaft Assembly, and Cylinder Housing

a. With pump housing (37) horizontal and mounted on baseplate (38), insert cam assembly (61) into pump housing. If shaft seals (62) are still in pump housing, cover shaft keyway with masking tape and slide it through seals. Remove tape. Place shaft rotator (from the Tool Kit) over end of cam assembly shaft and slide it up tight against pump housing. Keep cam assembly (61) horizontal and tight against pump housing bearing. Tighten shaft rotator set screw to shaft keyway. This will hold the cam assembly horizontal and aid in assembly.

b. Install O-ring (63) into pump housing (37) O-ring groove. Use grease to hold O-ring in groove.

c. Place cylinder housing (23) face-down on clean surface.

d. Insert bearing adjustment plate (57), with bearing cup (61A), dowel pin (58), and key (59), into cylinder housing (23).

e. Insert five piston assemblies into cylinder housing (23).

f. To aid in assembly, insert two cap screws (2) through pump housing from shaft side (at 10 and 2 o'clock positions).

g. Pick up cylinder housing assembly (23) and slide onto two cap screws (2) that are in pump housing (37). It will slide on until piston feet contact cam assembly (61). Insert up to eight more cap screws (2) through pump housing and cylinder housing to aid in alignment.

h. Using 17-mm hex socket or box-end wrench, install four 10-mm x 100-mm fully-threaded cap screws (from D/G-35 Tool Kit) through pump housing (37) where four socket head cap screws (31) were fastened. Tighten four cap screws evenly. Cylinder housing assembly (23) will pull tight against pump housing (37).

   One at a time, remove fully-threaded cap screws and replace with cap screws (31). Tighten four cap screws to 25 ft-lbs (34 N-m).

i. Remove shaft rotator.

6. Install Shaft Seals

a. Cover cam assembly shaft keyway (61) with masking tape to protect inside diameter of seals. Grease shaft and slide on one shaft seal (62) up to pump housing (37).

   Pack inside (spring side) of second shaft seal (62) half-full with grease. Slide shaft seal on and flush against first shaft seal. Make sure outside diameters of two shaft seals are clean and free of grease. Remove protective tape from cam assembly shaft.

b. Apply an anaerobic seal sealant or bearing retaining compound to outside diameter of shaft seals (62).

   Install shaft rotator/seal inserter (from the D/G-35 Tool Kit) over the cam assembly shaft. Using mallet, tap shaft rotator/seal inserter to push two seals into the pump housing (37). Wipe off excess sealant.

7. Reinstall Plungers

Note: If the plungers (22) have been removed from the valve plungers (69), do not reuse them. Install new ones.

a. Place plunger (22) onto exposed screw end of plunger guide lifter tool (from D/G-35 Tool Kit). The flat side of plunger should face plunger guide lifter tool.

b. Screw plunger guide lifter tool (with plunger) into valve plunger (69) until tight.

c. Pull valve plunger (69) up until its cross holes are exposed. Insert valve plunger holder (from D/G-35 Tool Kit) through top cross hole.

d. Hold hex bolt with wrench. At the same time, tighten the hex nut against the plunger (22) with another wrench.

e. Remove the plunger guide tool.

   Note: Before removing the valve plunger holder tool, install new diaphragm. See Reinstall Diaphragms below.

g. Repeat procedure for remaining cylinders.

8. Reinstall Diaphragms

Note: Keep the valve plunger holder tool installed in valve plunger (69) (as explained in Reinstall Plungers above).

a. Place diaphragm (21) onto plunger (22), ridge side out.

b. Center follower (20) on diaphragm.

c. Place O-ring (19) onto screw (18).

d. Apply small amount of thread locker to threads of screw (18).

e. Insert follower (18), with O-ring (19), through follower (20) and diaphragm (21). Screw into valve plunger (69).

f. Hold valve plunger holder tool and tighten screw (18) to 43 in-lbs (485 N-m).

g. Repeat above procedure for remaining cylinders.

h. Fill reservoir with fresh oil and prime pump (See Fluid End Service Section).

D/G-35 Troubleshooting

Problem	Probable Cause	Solution
Motor/Pump Does Not Operate:	No power.	Supply correct power according to motor requirements.
	Blown fuse/tripped circuit breaker.	Replace/reset, eliminate circuit overload.
	Shaft coupling to pump not in place.	Install proper coupling hardware (see parts list).
	Current overload - motor.	Motor not rated for pump operating conditions - install proper motor.
	Thermal overload - motor.	Motor not rated for pump and/or ambient operating conditions - supply cooling or install proper motor.
	Faulty motor drive/controller.	Repair/replace.
	Faulty motor.	Repair/replace.
	Low liquid level in supply tank (if low-level shut-off is used).	Fill tank.
No Delivery	Supply tank empty.	Fill tank.
	Loss of prime	Re-prime using Initial Start-Up Procedure.
	Inlet line or strainer clogged.	Clear debris and flush, or replace.
	Inadequate supply pressure at pump inlet.	Increase supply pressure by raising fluid level in tank, raising tank, or pressurizing suction tank.
	Inlet line too restrictive.	Increase inlet line diameter and/or decrease inlet line length.
	Fluid viscosity too high.	Reduce viscosity if possible (by heat or some other means). Increase inlet line diameter and/or decrease inlet line length. Increase supply pressure.
	Vapor lock/cavitation.	Increase inlet pressure. Decrease fluid temperature.
	Pump valves held open or worn out.	Clear debris and flush, or replace (see Fluid End Service)
	System relief valve actuating.	Adjust relief valve, or repair, clean, or replace with new relief valve.
Delivery Too Low and/or Erratic	Review all Probable Causes and Solutions in Problem 2 No Delivery above.	
	Air leak(s) in inlet line.	Locate all leaks and repair.
	System back pressure too low.	Adjust back pressure valve to higher setting. Install back pressure valve if none in system.
	Pumped fluid characteristics changed.	Monitor supply tank temperature to determine if fluid is too hot (leading to cavitation) or too cold (increasing fluid viscosity). Stabilize temperature at suitable level to resolve problem. Check for entrapped air in the fluid supply system.
	Inlet supply pressure changed.	Monitor inlet supply pressure (at the pump) to determine if it is too low, causing a starved condition/cavitation. Stabilize pressure at suitable level to resolve problem.
	Oil condition in pump hydraulic end changed.	Check oil level - if low evaluate for source of leakage. Consult factory for hydraulic end service.
		Change oil per recommended guidelines in maintenance section.
Delivery Too High and/or Erratic.	System back pressure too low.	Adjust back pressure valve to higher setting. Install back pressure valve if none in system.
	Inlet supply pressure changed.	Monitor inlet supply pressure (at the pump) to determine if it is too high, causing a “flow-through” condition. Stabilize pressure at suitable level to resolve problem.

D/G-35 Fluid End Parts

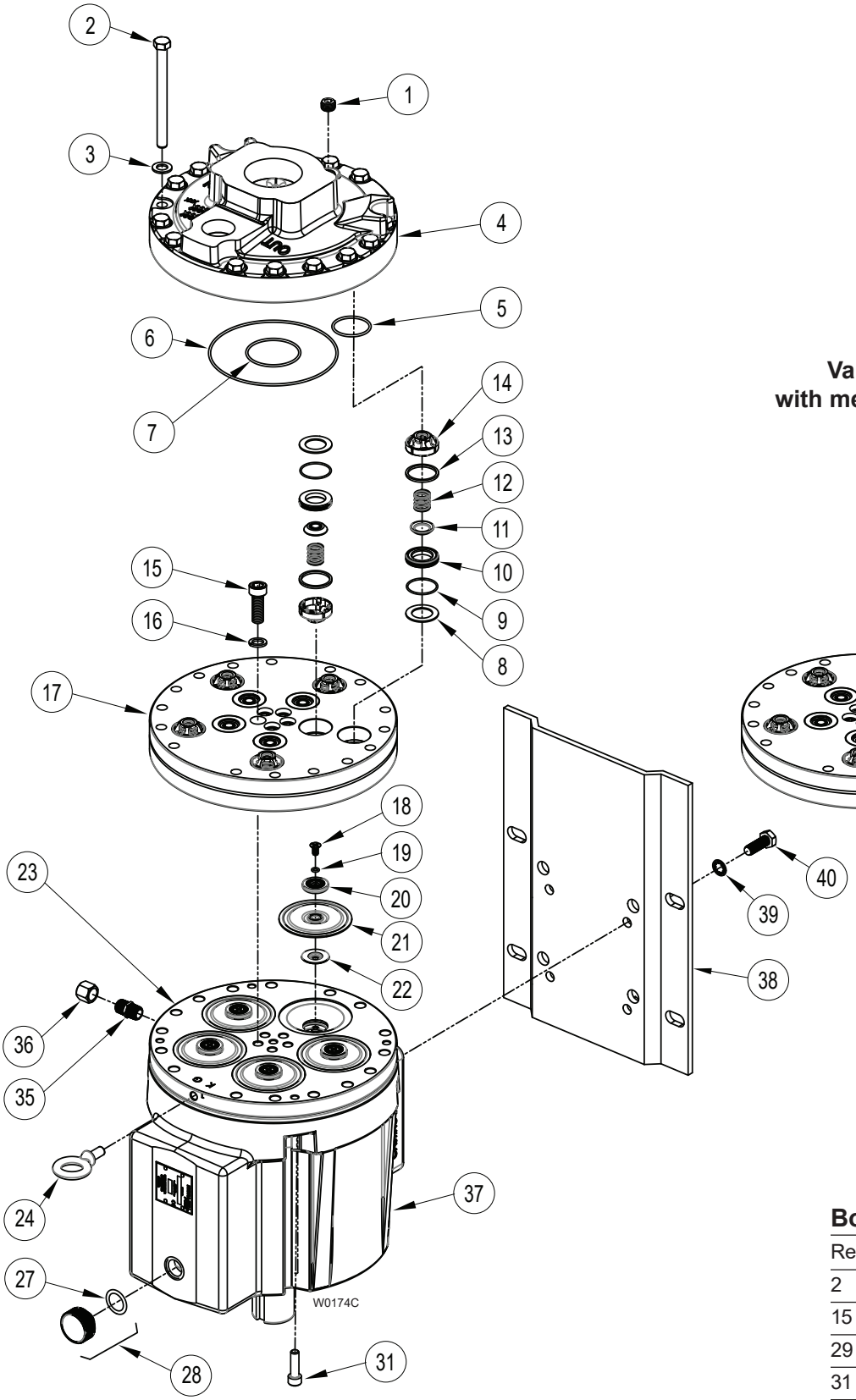

Valve Assemblies with metal spring retainers

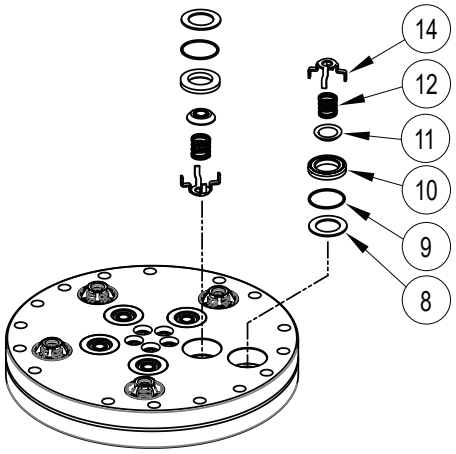

Bolt Torque Specifications

Ref. No.	Assembly Torque
2	65 ft-lbs (88 N-m)
15	65 ft-lbs (88 N-m)
29	9 ft-lbs (12 N-m)
31	25 ft-lbs (34 N-m)
40	45 ft-lbs (60 N-m)

D/G-35 Fluid End Parts

Ref. No.	Part Number	Description	Quantity/ Pump
1	D25-038-2017	Plug, Hastelloy C	1
	D25-038-2210	Plug, Brass	1
	D25-038-2211	Plug, 316 SST	1
2	G35-024-2010	Screw, Cap, hex-hd, 140 mm	16
3	D40-048-2010	Washer, Flat	16
4	D35-004-1002	Manifold, 316L SST, NPT	1
	D35-004-1007	Manifold, Ductile iron, NPT	1
	D35-004-1010	Manifold, Magn/bronze, NPT	1
	D35-004-1018	Manifold, Hastelloy, NPT	1
	D35-004-1028	Manifold, 2205, NPT	1
	D35-004-1030	Manifold, Magn/bronze, SAE flange	1
	D35-004-1032	Manifold, 316L SST, SAE flange	1
	D35-004-1037	Manifold, D.I. SAE flange	1
	D35-004-1038	Manifold, Hastelloy, SAE flange	1
	G35-004-1022	Manifold, 316L SST, BSPT	1
	G35-004-1027	Manifold, Ductile iron, BSPT	1
	G35-004-1020	Manifold, Magn/bronze, BSPT	1
	G35-004-1028	Manifold, Hastelloy, BSPT	1
	G35-004-1029	Manifold, 2205, BSPT	1
5	D25-074-2110	O-ring, Buna	5
	D25-074-2111	O-ring, Viton	5
	D25-074-2112	O-ring, Neoprene	5
	D25-074-2113	O-ring, EPDM	5
	D25-074-2118	O-ring, PTFE	5
6	D35-073-2110	O-ring, Buna	1
	D35-073-2111	O-ring, Viton	1
	D35-073-2112	O-ring, Neoprene	1
	D35-073-2113	O-ring, EPDM	1
	D35-073-2118	O-ring, PTFE	1
7	D35-080-2110	O-ring, Buna	1
	D35-080-2111	O-ring, Viton	1
	D35-080-2112	O-ring, Neoprene	1
	D35-080-2113	O-ring, EPDM	1
	D35-080-2118	O-ring, PTFE	1
8	D25-125-1011	Washer, Dampening, 316 SST	10
	D25-125-1017	Washer, Dampening, Hastelloy C	10
	D25-125-2310	Washer, Dampening, Celcon (Delrin)	10
	D25-125-2316	Washer, Dampening, Nylon	10
	D25-125-2317	Washer, Dampening, polypropylene	10
	D25-125-2318	Washer, Dampening, Kynar	10
9	D25-035-2110	O-ring, Buna	10
	D25-035-2111	O-ring, Viton	10
	D25-035-2112	O-ring, Neoprene	10
	D25-035-2113	O-ring, EPDM	10
	D25-035-2118	O-ring, PTFE	10
10	D25-020-1010	Valve Seat, 17-4 HT SST	10
	D25-020-1012	Valve Seat, Nitronic 50	10
	D25-020-1016	Valve Seat, Tungsten carbide	10
	D25-020-1017	Valve Seat, Hastelloy C	10
	D25-020-3300	Valve Seat, Ceramic	10
11	D25-021-1011	Valve, Nitronic 50	10
	D25-021-1015	Valve, 17-4 HT SST	10
	D25-021-1016	Valve, Tungsten carbide	10
	D25-021-1017	Valve, Hastelloy C	10
	D25-021-3300	Valve, Ceramic	10
12	D25-022-3110	Valve Spring, 17-7 HT SST	10
	D25-022-3114	Valve Spring, Elgiloy	10
	D25-022-3115	Valve Spring, Hastelloy C	10
13	D25-092-2110	Tetra Seal, Buna	10
	D25-092-2111	Tetra Seal, Viton	10
	D25-092-2112	Tetra Seal, Neoprene	10
	D25-092-2113	Tetra Seal, EPDM	10
	D25-092-2118	O-ring, PTFE	10
14	D25-023-1010	Retainer, Valve spring, 17-7 HT SST	10
	D25-023-1017	Retainer, Valve spring, Hastelloy C	10
	D25-023-2310	Retainer, Valve spring, Celcon	10
	D25-023-2316	Retainer, Valve spring, Nylon	10
	D25-023-2317	Retainer, Valve spring, polypropylene	10
	D25-023-2318	Retainer, Valve spring, Kynar	10
15	G35-081-2010	Screw, Cap, soc-hd, 40 mm	5
16	G35-084-2010	Washer, High collar	5
17	D35-003-1002	Valve Plate, 316 SST	1
	D35-003-1003	Valve Plate, Brass	1
	D35-003-1007	Valve Plate, Ductile iron	1
	D35-003-1018	Valve Plate, Hastelloy	1
	D35-003-1029	Valve Plate, 2205	1
18	D25-030-2010	Screw, Flat-hd, 316 SST	5
	D25-030-2011	Screw, Flat-hd, Hastelloy C	5
19	D25-047-2110	O-ring, Buna	5
	D25-047-2111	O-ring, Viton	5
	D25-047-2112	O-ring, Neoprene	5
	D25-047-2113	O-ring, EPDM	5
	D25-047-2118	O-ring, PTFE	5
20	D25-017-1010	Follower, 316 SST	5
	D25-017-1011	Follower, Hastelloy C	5
21	D25-018-2312	Diaphragm, Neoprene	5
	D25-018-2313	Diaphragm, EPDM	5
	D25-018-2315	Diaphragm, Viton-XT	5
	D25-018-2318	Diaphragm, PTFE	5
	D25-018-2320	Diaphragm, Buna-N-XS	5
	D25-018-2325	Diaphragm, AFLAS	5
22	D25-016-1010	Plunger	5

QUICK & DISCOUNTED PRICING
CLICK HERE
OR CALL (908) 362-9981

D/G-35 Fluid End Parts

Ref. No.	Part Number	Description	Quantity/ Pump
23	K35-002-1010	Cylinder Housing, Kel-Cell	1
	K35-002-1210	Cylinder Housing Assembly, Kel-Cell[1]	1
	K35-002-1242	Loaded Cylinder Housing Assembly, Kel-Cell, Neoprene[1]	1
	K35-002-1243	Loaded Cylinder Housing Assembly, Kel-Cell, EPDM[1]	1
	K35-002-1244	Loaded Cylinder Housing Assembly, Kel-Cell, Buna N-XS[1]	1
	K35-002-1245	Loaded Cylinder Housing Assembly, Kel-Cell, Viton XT[1]	1
	K35-002-1246	Loaded Cylinder Housing Assembly, Kel-Cell, PTFE[1]	1
	K35-002-1247	Loaded Cylinder Housing Assembly, Kel-Cell, AFLAS[1]	1
24	D40-102-2010	Eyebolt	1
27	D10-080-2110	O-ring, Buna, 118	1
28	D03-039-1030	Cap with O-ring, Oil fill	1
31	G35-029-2010	Screw, Cap, soc-hd, 35 mm	4
35	D35-155-0001	Pipe, Brass	1
36	D25-078-2210	Pipe Cap, Brass	1
37	G35-001-1210	Pump Housing Assembly, Aluminum[2]	1
38	D40-025-1010	Baseplate	1
39	G35-054-2010	Washer, Internal tooth	4
40	G35-087-2010	Screw, Cap, hex-hd, 35 mm	4

QUICK & DISCOUNTED PRICING
CLICK HERE
OR CALL (908) 362-9981

[1] Cylinder Housing Assembly includes housing (23) and bearing tension assembly (50-56).

[2] Pump Housing Assembly includes housing (37), oil drain (35, 36), and bearing cup (61B).

D/G-35 Hydraulic End Parts

Bolt Torque Specifications

Ref. No.	Assembly Torque
56	25 ft-lbs (34 N-m)

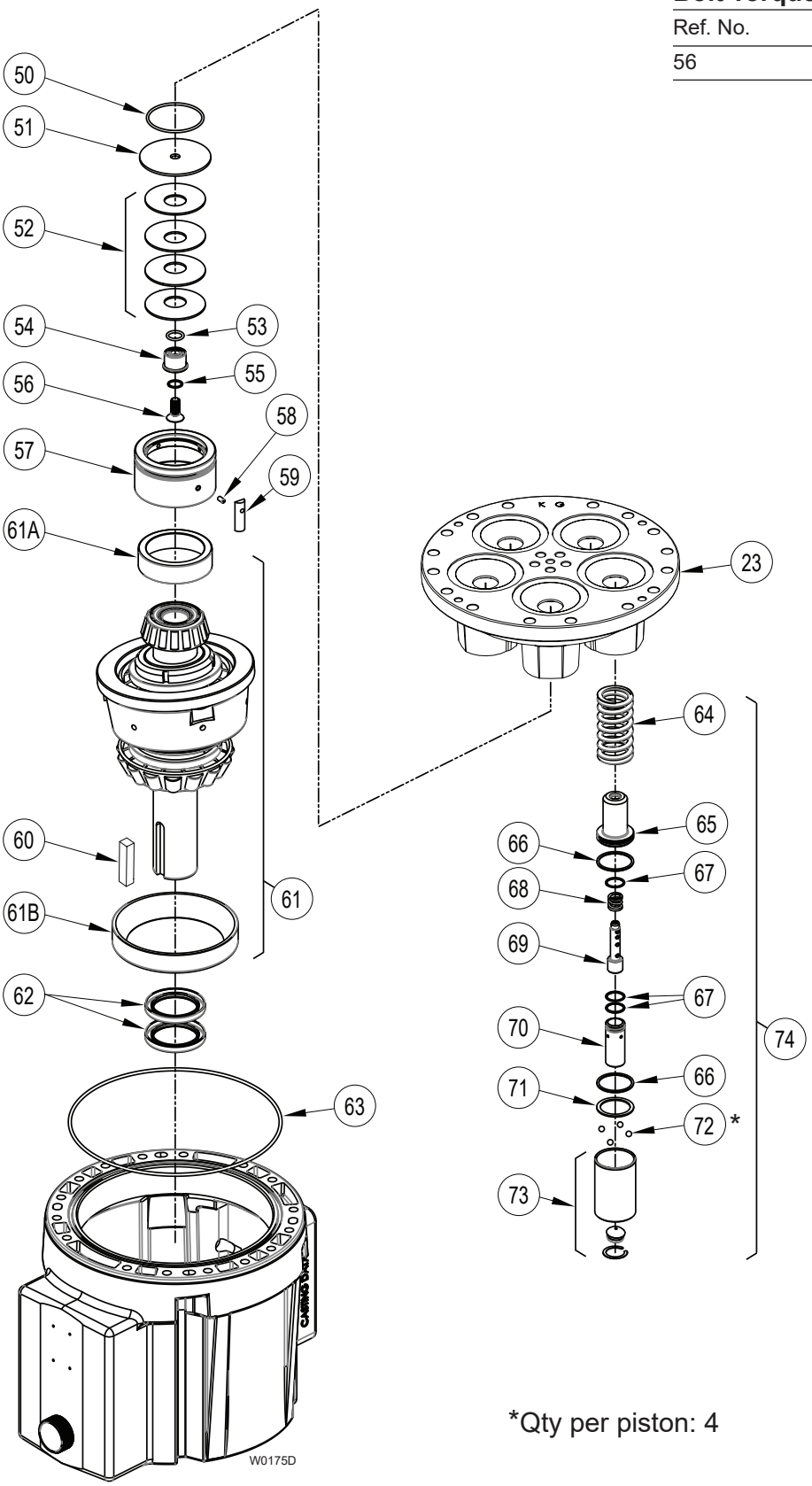

*Qty per piston: 4

D/G-35 Hydraulic End Parts

Ref. No.	Part Number	Description	Quantity/ Pump
50	D35-080-2110	O-ring, Buna	1
51	D35-116-1010	Washer, Backup	1
52	D40-075-3110	Spring, Disc	4
53	D10-083-2110	O-ring, Buna	1
54	D35-112-1011	Guide, Disc spring	1
55	D40-047-2110	O-ring, Buna	1
56	G35-115-2011	Screw, Flat-hd, 25 mm	1
57	D35-012-1011	Plate, Bearing adjustment	1
58	D35-110-2011	Pin, Dowel, 3/16 in. x 3/8 in. lg	1
59	D35-113-1010	Key	1
60	D40-085-1010	Key, Shaft	1
61	D35-007-1210	(X) Cam Assembly, 37 GPM @ 1050 RPM [1]	1
	D35-007-1212	(E) Cam Assembly, 35 GPM @1160 RPM [1]	1
61A	D35-011-2911	Cup, Bearing	1
61B	D40-010-2911	Cup, Bearing	1
62	D40-031-2110	Seal, Shaft	2
63	D35-037-2110	O-ring, Buna	1
64	D25-019-3111	Spring, Piston return	5
65	D25-042-1010	Retainer, Spring	5
66	D25-034-2110	O-ring, Buna	10
67	D25-046-2110	O-ring, Buna	15
68	D25-045-3110	Spring, Sleeve valve	5
	H25-045-3111	Spring, Sleeve valve for PTFE diaphragm	5
	K25-045-3110	Spring, Sleeve valve, Kel-Cell	5
69	D25-044-1010	Plunger, Valve	5
	K25-044-1010	Plunger, Valve, Kel-Cell	5
70	D25-043-1010	Cylinder, Valve	5
	K25-043-1010	Cylinder, Valve, Kel-Cell	5
71	D25-041-1010	Washer, Retaining	5
72	D25-015-3010	Ball, Steel	20
73	D25-014-1209	Piston, with foot and retainer	5
74	D25-014-1210	Piston Assembly [2]	5
	K25-014-1210	Piston Assembly, Kel-Cell [2]	5

[1] Cam Assembly includes cam, shaft, wobble plate, bearings, cups and bearing carrier (57-59). It is only available as an assembly.

[2] Piston Assembly includes cylinder, foot, valve plunger, O-rings, spring retainer, and springs (64-73).

QUICK & DISCOUNTED PRICING
CLICK HERE
OR CALL (908) 362-9981

D/G-35 Series Replacement Parts Kits

TO ORDER REPLACEMENT PARTS KIT: A Replacement Parts Kit contains 11 digits corresponding to customer-specified design options.

1	2	3	4	5	6	7	8	9	10	11

Digit	Order Code	Description
1-3		**Pump Configuration**
	D35	For all D-35 Pumps
	G35	For all G-35 Pumps
4		**Kit Designator**
	K	Complete Fluid End Kit
	D	Diaphragm Kit
	V	Valve Kit (diaphragm not included)
5-6		**Pump Head Version**
	52	Pump Head Version
7		**Diaphragm & O-ring Material**
	A	AFLAS
	E	EPDM
	G	Viton®-XT
	J	PTFE
	P	Neoprene
	T	Buna-N-XS
8		**Valve Seat Material**
	C	Ceramic
	D	Tungsten Carbide
	H	17-4 PH Stainless Steel
	N	Nitronic 50
	T	Hastelloy® C
	X	Not included in Diaphragm Kit
9		**Valve Material**
	C	Ceramic
	D	Tungsten Carbide
	F	17-4 PH Stainless Steel – Machined
	N	Nitronic 50
	T	Hastelloy® C
	X	Not included in Diaphragm Kit
10		**Valve Springs**
	E	Elgiloy®
	H	17-7 PH Stainless Steel
	T	Hastelloy® C
	X	Not included in Diaphragm Kit
11		**Valve Spring Retainers**
	C	Celcon
	H	17-7 PH Stainless Steel
	M	Kynar®
	P	Polypropylene
	T	Hastelloy® C
	Y	Nylon (Zytel)
	X	Not included in Diaphragm Kit

Kit Contents

Part Number*	Description	Qty	Kit Designator K	D	V
D25-018-___	Diaphragm	5	•	•	
D25-047-___	O-ring, Follower	5	•	•	
D25-074-___	O-ring, Outlet valve	5	•	•	•
D35-073-___	O-ring, Outer manifold	1	•	•	•
D35-080-___	O-ring, Center manifold	1	•	•	•
D25-035-___	O-ring, Valve seat	10	•		•
D25-020-___	Valve seat	10	•		•
D25-021-___	Valve	10	•		•
D25-022-___	Valve spring	10	•		•
D25-092-___	Tetra Seal[1]	10	•		•
D25-023-___	Retainer, Valve spring	10	•		•
D25-125-___	Washer, Dampening	10	•		•
A01-113-3400	Threadlocker	1	•	•	

* Last four digits of part numbers with –___ refer to specific material of construction.
[1] Tetra seal is provided with non-metallic spring retainers only.

QUICK & DISCOUNTED PRICING
CLICK HERE
OR CALL (908) 362-9981