P200 PRO SERIES
METERING PUMPS

Maximum Flow Rate: 81.0 gph (255.4 lph)
Maximum Pressure: 1000 psi (69 bar) for Metallic Pump Heads
350 psi (24 bar) for Non-metallic Pump Heads

WANNER™ HYDRA-CELL® PRO
METERING PUMP SOLUTIONS

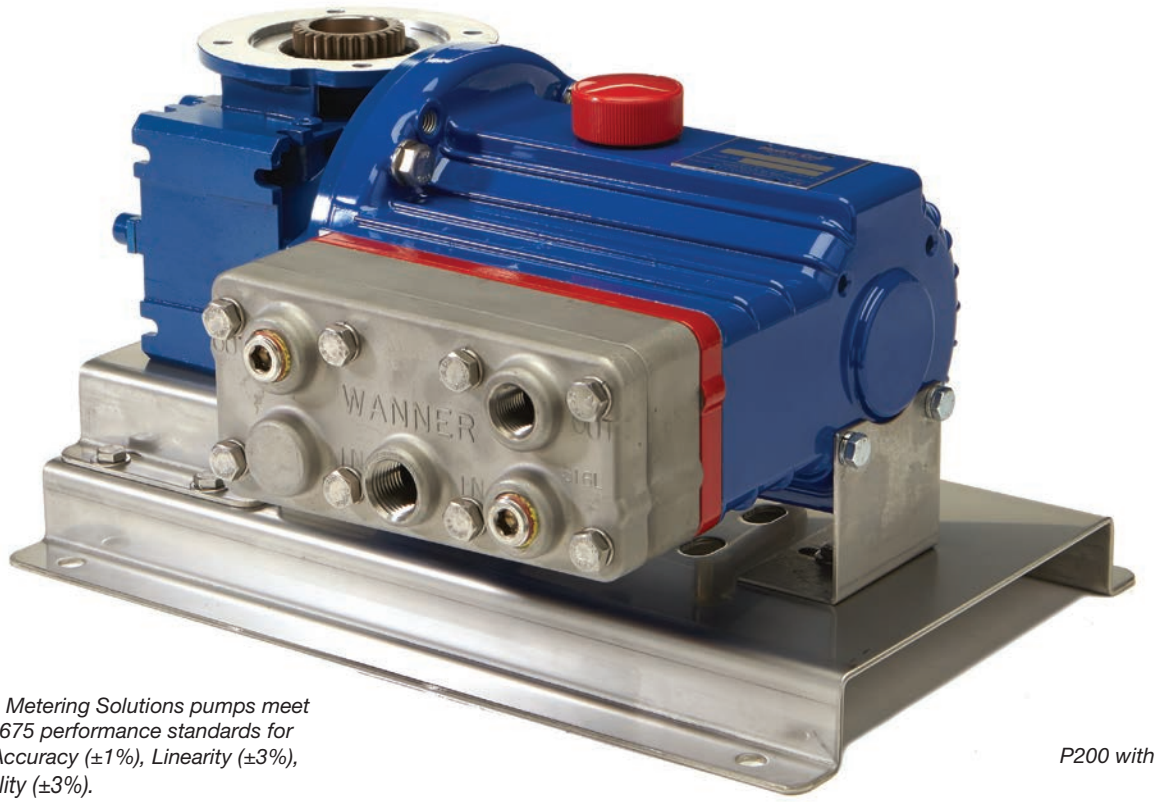

Hydra-Cell Pro Metering Solutions pumps meet or exceed API 675 performance standards for Steady-State Accuracy (±1%), Linearity (±3%), and Repeatability (±3%).

UK CA CE

P200 with Stainless Steel pump head

Metering Pump with "Pulse-Free" Linear Flow

- Handles a wide range of fluids from clear water to thick slurries
- Electronic flow control increases accuracy and reliability
- Smaller footprint saves valuable space
- One pump covers a wide range of flows and pressures – reducing inventory requirements with fast, simple field conversion
- Duplexing option doubles capacity and equipment savings
- Hydraulically-actuated, balanced diaphragms provide superior performance across entire pressure range
- Rugged construction with a variety of affordable choices for liquid end, diaphragm and check valve materials
- Seal-less design means no seals, cups, or packing to leak or replace
- A replenishment valve in every piston assembly ensures optimum actuating oil on every stroke for continuous accuracy

WANNER™

QUICK & DISCOUNTED PRICING
CLICK HERE
OR CALL (908) 362-9981

Performance

Flows are based upon lab testing of multiple pumps. However, flows listed are approximate values and pumps must be calibrated once installed into any system. Flow variations will occur, but calibration will ensure proper pump performance.

Maximum Flow (gph) at Designated Pressure (psi)

All Pumps (gph) 100 psi	All Pumps (gph) 250 psi	Metallic Pump Heads Only (gph) 500 psi	Metallic Pump Heads Only (gph) 1000 psi	Pump rpm	Gear Ratio	Motor rpm
3.378	3.321	3.249	3.128	30	60:1	1800
4.059	3.994	3.911	3.776	36	50:1	
5.072	5.015	4.908	4.748	45	40:1	
6.758	6.686	6.555	6.353	60	30:1	
8.107	8.022	7.873	7.637	72	25:1	
10.130	10.027	9.849	9.563	90	20:1	
13.503	13.369	13.14	12.77	120	15:1	
20.248	20.052	19.73	19.19	180	10:1	
26.993	26.735	26.32	25.62	240	7.5:1	
40.483	40.101	39.49	38.46	360	5:1	
53.97	53.47	52.66	51.30	480	7.5:1	3600
80.95	80.20	79.01	76.98	720	5:1	

Required Motor hp

1/4	1/2	3/4	1	1-1/2

Maximum Flow (lph) at Designated Pressure (bar)

All Pumps (lph) 7 bar	All Pumps (lph) 17 bar	Metallic Pump Heads Only (lph) 34 bar	Metallic Pump Heads Only (lph) 69 bar	Pump rpm	Gear Ratio	Motor rpm
10.65	10.48	10.25	9.868	25	60:1	1500
12.81	12.60	12.34	11.91	30	50:1	
16.00	15.82	15.48	14.98	37.5	40:1	
21.32	21.09	20.68	20.04	50	30:1	
25.57	25.31	24.83	24.09	60	25:1	
31.96	31.63	31.07	30.17	75	20:1	
42.59	42.17	41.46	40.29	100	15:1	
63.87	63.25	62.23	60.55	150	10:1	
85.15	84.34	83.01	80.80	200	7.5:1	
127.7	126.5	124.6	121.3	300	5:1	
170.3	168.7	166.1	161.8	400	7.5:1	3000
255.4	253.0	249.2	242.8	600	5:1	

Required Motor kW

0.18	0.25	0.37	0.55	0.75

Due to the Wanner Engineering Continuous Improvement Program, specifications and other data are subject to change.

P200 Pro Series Metering | Performance

Pump Data

Diaphragms per Liquid End	3
Flow Control	Electronic variable speed drive
Maximum Discharge Pressure	
Metallic Heads:	1000 psi (69 bar)
Non-metallic Heads:	PVDF – 350 psi (24 bar)
	Polypropylene – 250 psi (17 bar)
Maximum Inlet Pressure	250 psi (17 bar)
Maximum Operating Temperatures	
Metallic Heads:	250˚F (121˚C)
Non-metallic Heads:	140˚F (60˚C)
Consult factory for correct metallic head component selection for temperatures from 160˚F (71˚C) to 250˚F (121˚C).	
Maximum Solids Size	200 microns
Inlet Port	1/2 inch NPT or BSPT
Discharge Port	3/8 inch NPT or BSPT
Shaft Rotation	Bi-directional
Oil Capacity	1.0 US quarts (0.95 liters)
Weight (less motor)	
Metallic Heads:	41.8 lbs. (19.0 kg)
Non-metallic Heads:	32.8 lbs. (14.9 kg)
Dimensions (less motor)	
Metallic Heads:	15.59" W x 11.68" D x 8.97" H (396.1 mm W x 296.7 mm D x 227.8 mm H)
Non-metallic Heads:	15.59" W x 12.06" D x 8.97" H (396.1 mm W x 306.3 mm D x 227.8 mm H)
For NEMA 56 motor frames only; see page 6 for other motor frame sizes.	

Accessories, Options and Services

Consult Wanner Engineering for complete details about available accessories and options as well as special services.

- Manifolds and Flanges
- Multiplexing Capability
- Different Gearbox Ratios
- Oil Cooler Systems
- Actuating Oils
- Magnetic Drain Plug
- Motors (Standard/Hazardous-duty)
- Controllers
- Control Freak™ Touch-screen Metering Controller
- SmartDrive Motor-Controller
- Calibration Cylinders
- Back Pressure Valves
- Pressure Relief Valves
- Pulsation Dampeners
- Demonstration (Cutaway) Units
- Testing Services
- System Components, Priming Kits and Plugs
- Replacement Part Kits and Tool Kits
- Customization Services

P200 with Polypropylene pump head

P200 with Brass pump head

Due to the Wanner Engineering Continuous Improvement Program, specifications and other data are subject to change.

Metallic and Non-metallic Pump Heads Inches (mm)

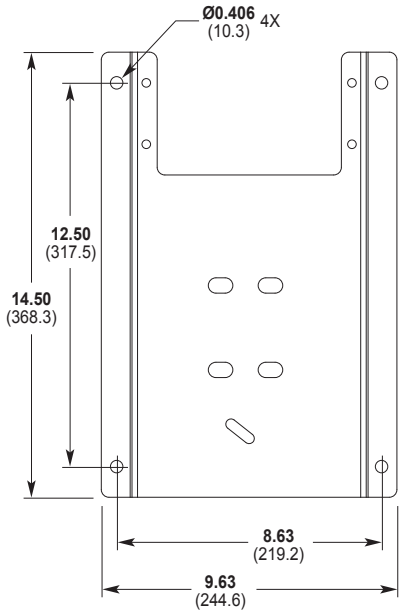

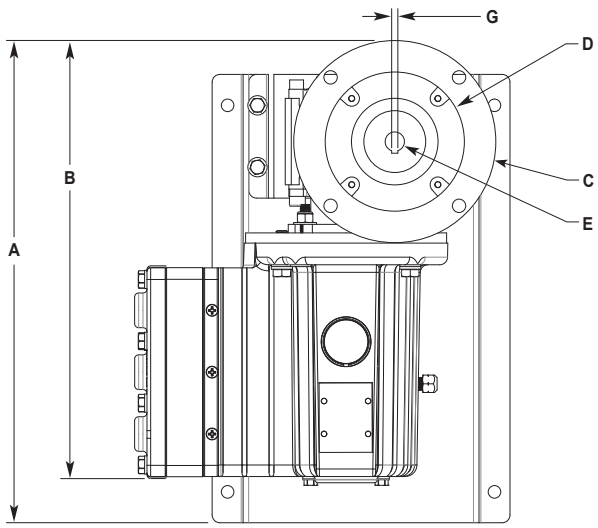

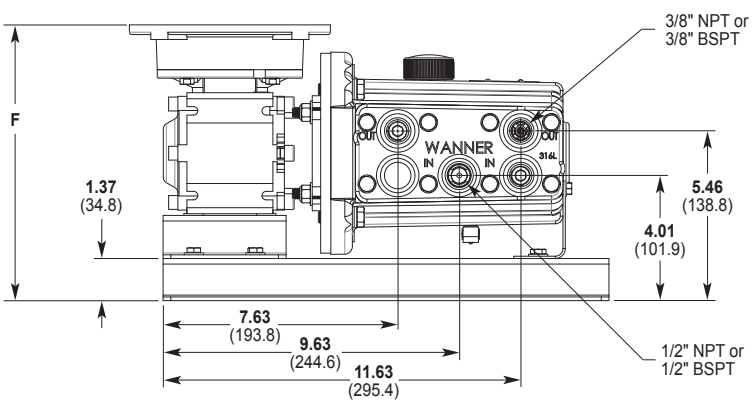

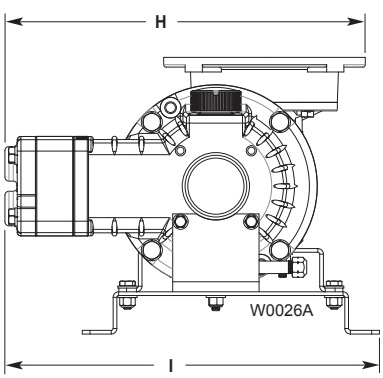

Note: Dimensions are for reference only. Contact factory for certified drawings.

Dimensions: Inches (mm)

Input Frame Size	A	B	C	D	E	F	G (Square Key)	H		I	
								Metallic Pump Head	Plastic Pump Head	Metallic Pump Head	Plastic Pump Head
NEMA 56C	15.59 (396.1)	14.17 (359.8)	ø 6.54 (ø 166)	ø 4.50 (ø 114.3)	ø 0.62 (ø 15.7)	8.97 (227.8)	0.187 (4.7)	11.68 (296.7)	12.06 (306.3)	12.14 (308.3)	12.51 (317.75)
NEMA 143/145TC	17.53 (445.3)	16.04 (407.4)	ø 6.54 (ø 166.1)	ø 4.50 (ø 114.3)	ø 0.88 (ø 22.3)	11.09 (281.7)	0.187 (4.7)	11.68 (296.7)	12.06 (306.3)	12.14 (308.3)	12.51 (317.75)
IEC 63 B5	15.08 (383)	13.65 (346.7)	ø 5.51 (ø 140)	ø 3.74 (ø 95)	ø 0.43 (ø 11)	8.80 (223.5)	0.157 (4)	11.17 (283.7)	11.55 (293.4)	12.14 (308.3)	12.51 (317.75)
IEC 71 B5	15.48 (393.1)	14.05 (356.7)	ø 6.30 (ø 160)	ø 4.33 (ø 110)	ø 0.55 (ø 14)	8.80 (223.5)	0.196 (5)	11.56 (293.6)	11.94 (303.3)	12.14 (308.3)	12.51 (317.75)
IEC 80 B5	16.26 (413)	14.835 (376.7)	ø 7.87 (ø 200)	ø 5.12 (ø 130)	ø 0.75 (ø 19)	8.80 (223.5)	0.236 (6)	12.35 (313.7)	12.72 (323)	12.14 (308.3)	12.51 (317.75)
IEC 90 B5	16.26 (413)	14.835 (376.7)	ø 7.87 (ø 200)	ø 5.12 (ø 130)	ø 0.94 (ø 24)	9.24 (234.7)	0.314 (8)	12.35 (313.7)	12.72 (323)	12.14 (308.3)	12.51 (317.75)

Ordering Information

A complete pump order number contains 13 digits based on the specified pump materials listed below.

1	2	3	4	5	6	7	8	9	10	11	12	13
P	2	0	0									

Digit	Order Code	Description	
1-4		**Pump Configuration**	
	P200	For all P200 Pumps (Non Kel-Cell)	
5		**Pump Version**	
	N	NPT Ports (NEMA motors only)	
	M	BSPT Ports (IEC motors only)	
	X	ATEX BSPT Ports (IEC motors only)	
6		**Pump Head / Retainer Material**	
	B	Brass / Hastelloy C	
	M	PVDF / PVDF	
	P	Polypropylene / Polypropylene	
	S	316L Stainless Steel / Hastelloy C	
	T	Hastelloy C / Hastelloy C	
7		**Diaphragm & O-ring Material / Oil▲**	
	A	Aflas / PTFE O-ring (Synthetic oil)	
	M	Aflas / PTFE O-rings & FKM drive case elastomers (Mesamoll oil)	
	E	EPDM (EPDM-compatible oil)	
	X	FKM (Synthetic oil)	
	J	PTFE (Food-contact oil)	
	P	Neoprene (Synthetic oil)	
	T	Buna-N (Synthetic oil)	

▲ *See price list for different actuating oils available with these materials.*

Digit	Order Code	Description	
8-9		**Check Valve Material (Valve Spring / Valve Seat / Valve)**	
	SS	Elgiloy / 316L SST / Nitronic 50	
	TT	Hastelloy C / Hastelloy C / Hastelloy C	
	SC	Elgiloy / Ceramic / Ceramic	
	TC	Hastelloy C / Ceramic / Ceramic	
10-12		**Gearbox Ratio / NEMA Motors**	
	060	60:1	(56C Motor Frame)
	050	50:1	(56C Motor Frame)
	040	40:1	(56C Motor Frame)
	030	30:1	(56C Motor Frame)
	025	25:1	(56C Motor Frame)
	020	20:1	(56C Motor Frame)
	015	15:1	(56C Motor Frame)
	010	10:1	(56C Motor Frame)
	007	7.5:1	(56C Motor Frame)
	005	5:1	(56C Motor Frame)
	A05	5:1	(143/145TC Motor Frame)

Digit	Order Code	Description	
10-12		**Gearbox Ratio / IEC Motors**	
	060	60:1	(63 B5 Motor Frame)
	050	50:1	(63 B5 Motor Frame)
	040	40:1	(63 B5 Motor Frame)
	B40	40:1	(80 B5 Motor Frame)
	030	30:1	(63 B5 Motor Frame)
	B30	30:1	(80 B5 Motor Frame)
	025	25:1	(63 B5 Motor Frame)
	020	20:1	(63 B5 Motor Frame)
	B20	20:1	(80 B5 Motor Frame)
	015	15:1	(63 B5 Motor Frame)
	A15	15:1	(71 B5 Motor Frame)
	010	10:1	(63 B5 Motor Frame)
	A10	10:1	(71 B5 Motor Frame)
	B10	10:1	(80 B5 Motor Frame)
	007	7.5:1	(63 B5 Motor Frame)
	A07	7.5:1	(71 B5 Motor Frame)
	B07	7.5:1	(80 B5 Motor Frame)
	C07	7.5:1	(90 B5 Motor Frame)
	005	5:1	(63 B5 Motor Frame)
	A05	5:1	(71 B5 Motor Frame)
	B05	5:1	(80 B5 Motor Frame)
13		**Base Plate**	
	C	Carbon Steel (Epoxy painted)	
	S	304 Stainless Steel	

QUICK & DISCOUNTED PRICING
CLICK HERE
OR CALL (908) 362-9981